Leica GR30/GR50 & GM30
Online Help Manual

SPIDER

PART OF HEXAGON

- when it has to be **right**

Leica Geosystems

Table of Contents

1: Introduction

How to use the Online Help: Overview

The GR/GM Operational Manual (Online Help) is comprehensive guide to the GR/GM receivers and their operation.

The table below provides a brief description of each chapter:

Chapter	Description
1: Introduction	Detailed instructions on how to use the Online Help and find and print topics. A summary of all available documentation for the GR/GM receivers is listed.
2: Description of the system	Includes a summary of the GR/GM receivers, reference station components, instrument components, operation, software and power supply.
3: Installation	Detailed diagrams showing installation options.
4: User interface	Detailed diagrams describing the instrument screen (GR25/50 only), keyboard, LED indicators, USB/SD card cover and the Web interface.
5: Getting started	Detailed instructions on how to setup your instrument and access the web interface.
6: Context sensitive help	Includes detailed context sensitive help for every page in the web interface.
7: GR/GM receiver software	A detailed summary of the GR/GM receiver software and step-by-step guides to upgrade firmware.
8: GNSS Spider / Remote Access	An overview of the GNSS Spider, remote access process and the requirements that are required.
9: How to	A list of step-by-step guides to help you configure and use the receiver.
10: Support resources	A summary of the support resources available for a GR/GM user.
11: External devices	This section explains which external devices can be used with the GR/GM receivers. Includes step-by-step guides for each device.
12: Default settings	Detailed information on the reformatting of the receiver settings.
13: Technical Data	Technical data for the GR/GM receivers and GNSS antennas.
14: Legal Information	Legal information
Appendix A: Ports & Pin Assignments	A summary of port and pin assignments. • GR10/30 & GM10/30 • GR25/50
Appendix B: NMEA Messages	A list of all NMEA messages supported by the GR/GM receivers.
Appendix C: RTCM Messages	A list of all RTCM messages supported by the GR/GM receivers.
Appendix D: RINEX 3	A summary of the meteo observation types as defined in RINEX v3.
Appendix E: Web interface: Directory Structure of the Menu Bar	A summary of the directory structure of the web interface.
Appendix F: Directory Structure of the Memory Device	A summary of the directory structure of the memory device.
Appendix G: GR/GM default settings	The GR/GM default settings.
Appendix H: Event log messages	A list of important event log messages
Appendix I: Velocity & Displacement Engine Data Rate Relationship	A description of Velocity & Displacement Engine rate
Appendix J: Glossary	A description of common GNSS terms.

Further information

How to display and use the Online Help

How to find a Online Help topic

How to print a Online Help topic

How to display and use the Online Help

Accessing the Online Help using the Web interface

There are three ways to access the Online Help whilst using the Web interface

Access Online Help	Description
Help	Press the help menu to open the complete Online Help.
	Press to open content-sensitive help.
	Press to activate hints on the active Web interface page.

Online Help User Interface

Before you use the online help please click the "Show" link at the top left of the page. This will enable the tri-pane window.

The HTML Help viewer is a tri-pane window presenting you with a navigation pane to the left and a pane for displaying help contents and selecting browse sequences on the right.

The Contents tab is synchronized with the topic pane, so that users never lose their place.

Field	Description
Contents	The Contents tab displays a table of contents. Books and pages represent the categories of information in the online help system. When you double-click a closed book, it opens to display its content (sub-books and pages). When you double-click an open book, it closes. When you click pages, you select topics to view in the right-hand pane of the HTML Help viewer.
Index	The Index tab displays a list of keywords and phrases. The keywords are associated with their corresponding topics.
Search	The Search tab enables you to search for words in the help system and locate topics containing those words. Full-text searching looks through every word in the Online Help to find matches. When the search is completed, a list of topics is displayed so you can select a specific topic to view.

Further information

How to find a Online Help topic

How to print a Online Help topic

How to find a online help topic

- Click the **Contents** tab to browse through topics by category.
- or click the **Index** tab to see an alphabetically ordered list of index entries: either type the word you're looking for or scroll through the list.
- or click the **Search** tab to search for words and/ or phrases that may be contained in a Help topic. Combine several phrases by logical operators for a more advanced search.

How to use Search step-by-step

To use the online help search follow these steps:

Steps	Description
1	To find information with advanced full-text search click the **Search** tab and type the word or phrase you want to find.
2	Click **GO** and select a topic listed below.
	• Searches are not case-sensitive, so you can type your search in uppercase or lowercase characters.

	• You may search for any combination of letters (a-z) and numbers (0-9). • Punctuation marks such as the period, colon, semicolon, comma, and hyphen are ignored during a search.

Further information

How to display and use the Online Help

How to print a Online Help topic

How to print an online help topic

Background information

The entire GR/GM Operational Manual (Online Help) can be printed from the PDF version.

To print an individual Online Help topic follow the steps listed below.

How to Print step-by-step

Internet Explorer

Steps	Description
1	Open the Online Help topic
2	Open the **Show Navigation Component** if not already visible.
3	Click in the topic frame on the right or highlight a section of text you wish to print.
4	Go to **File** / **Print Preview**.
5	From the **Select Content** drop down list select, **Only the selected frame**.
☞	Select **As selected on screen** to only print a highlighted section of text.
6	If you are happy with what is displayed on the screen, press Print.

Mozilla Firefox

Steps	Description
1	Open the Online Help topic.
2	Right click in the topic frame on the right.
3	Go to This **Frame / Print Frame.**
4	The Print window opens.
5	Select the Printer Name and press OK.

Google Chrome

Steps	Description
1	Open the Online Help topic.
2	Right click in the topic frame on the right.
3	Go to **Open frame in new tab/window.**
4	Right click in the topics frame.
5	Go to **Print**.

Further information

How to display and use the Online Help

How to find a Online Help topic

Available documentation

Name	Description	Printed	PDF
GR/GM User Manual	All instructions required in order to operate the product to a basic level are contained in the User Manual. Provides an overview of the product together with technical data and safety directions.	✔	✔
GR/GM Operational Manual (Online Help)	Comprehensive guide to the product and the operation. Includes a description of the hardware installation and common accessories. Software setup is described in detail, along with the technical specifications.	-	✔
GNSS Reference Station and Networks - An Introductory Guide	Offers practical advice on how to set up and run individual GNSS reference stations and networks of stations and to provide the services that are required.	✔	✔
GNSS Networks and Reference Stations Equipment List	Detailed list of equipment available for GNSS reference stations including hardware and software.	-	✔
Monitoring Equipment List	Detailed list of equipment available for Monitoring solutions.	-	✔

Refer to the following resources for all GR/GM receiver documentation/software:

- the Leica digital storage device
- https://myworld.leica-geosystems.com

2: Description of the system

Description of the system: Overview

Menu option	Description
General Information	A detailed list of GR/GM receiver design features, special features and satellites tracked.
GNSS Reference Station Components	Details a typical reference station setup and the most common accessories that can be used with a GR/GM receiver.
Unpacking the instrument	A list of the minimum items delivered with a GR/GM receiver.
Instrument Components	A labelled diagram of the • GR10/30 & GM10/30 • GR25/50
Operation	An overview of how to operate the instrument.
Software	An overview of the software for the GR/GM receivers.
Power Supply	An overview of the power supply options for the GR/GM receivers.

A detailed description of every Web Interface page is included in the **Context sensitive help** section.

General Information

Design

The GR/GM receivers

- are designed for a variety of permanent and semi-permanent reference station applications including network RTK, single base station, scientific, campaign, monitoring and seismic studies
- collect, store and disseminate GNSS data
- are highly suited to system integration
- support a variety of external devices including communication, meteo and tilt

Features

- 50 Hz data logging and streaming.
- SmartTrack+ measurement engine for higher accuracy and availability.
- Up to 10 multiple logging sessions and 20 data streams.
- Multiple data storage formats including MDB, RINEX and Hatanaka.
- Supports high capacity storage up to 32 GB and intelligent Smart clean-up.
- Multiple data output formats including Leica, Leica 4G, RTCM 2.x,3.x, LB2, BINEX, CMR, CMR+.
- Modern, user friendly Web interface GUI, available in different languages.
- Seamless integration with Leica GNSS Spider.
- Robust lightweight metal housing.
- Fully ruggedised to IP67, including a ruggedised Ethernet port.
- Simple mounting for IT rack, cabinet and wall mount. Receiver is also stackable.
- Built in communications Slot-in port.
- Integrated device management for external devices.
- Supports DHCP, DNS, DynDNS and mobile internet.
- Improved security including IP filtering, access management and HTTPS with custom SSL.
- Out of the box plug and play hostname setup.
- Wide supply voltage 10.5-28 V.

- Low-power consumption, with 3.0-3.5 W typical.
- External Oscillator Port
- USB Client Port

Special features GR25/50 only

In addition, the GR25/50 receivers are equipped with several special features:

- Integrated screen and keypad.
- Internal battery and charger.
- USB host port.
- Power over Ethernet.
- Bluetooth or WLAN.
- PPS and event port.

GNSS Reference Station Components

GNSS Reference Station Components

Component overview

The following diagram shows a typical reference station setup and the most common accessories that can be used with a GR/GM receivers.

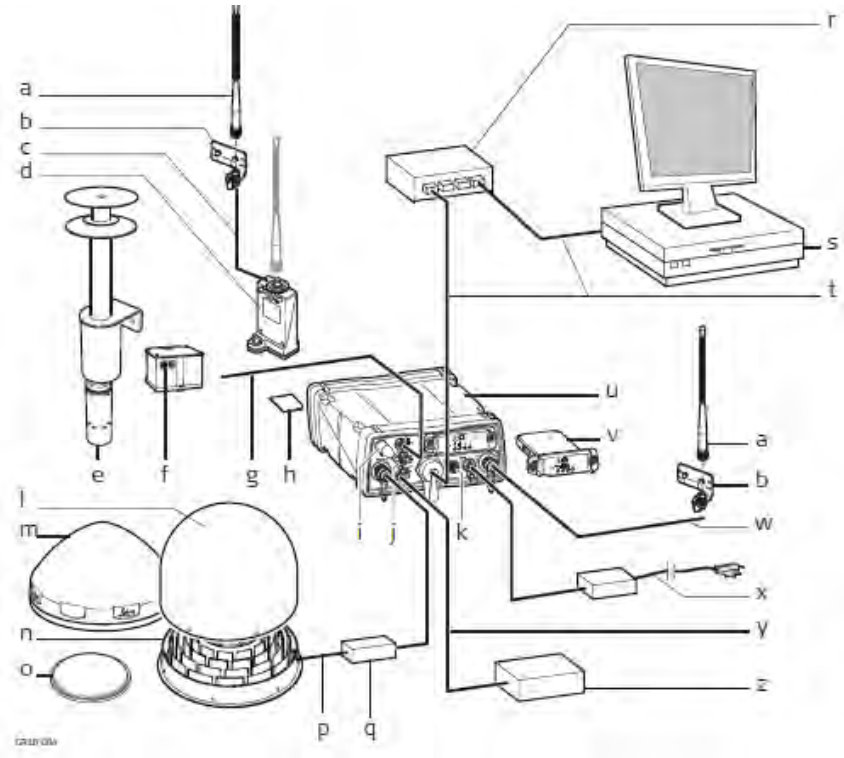

a. Radio/GSM antenna
b. Antenna bracket
c. Antenna cable
d. GFU housing including Radio/GSM device
e. Meteo sensor
f. Tilt sensor
g. Serial cable
h. SD card
i. Bluetooth or WLAN antenna *
j. Serial port 2 / Event port *
k. Connector for external oscillator
l. Optional radome for AR25
m. GNSS antenna, AR10
n. GNSS antenna, AR25
o. GNSS antenna, AS10
p. Antenna cable
q. Optional lighting protection
r. Ethernet hub
s. Computer running GNSS Spider or Web interface
t. Ethernet cable
u. GR/GM receiver
v. Slot-in radio/GSM device
w. Antenna cable
x. Power supply
y. PPS cable *
z. Device receiving electric pulse *

* GR25/50 only

Minimum setup components

The following diagram shows the minimum components required to operate a GR/GM receiver.

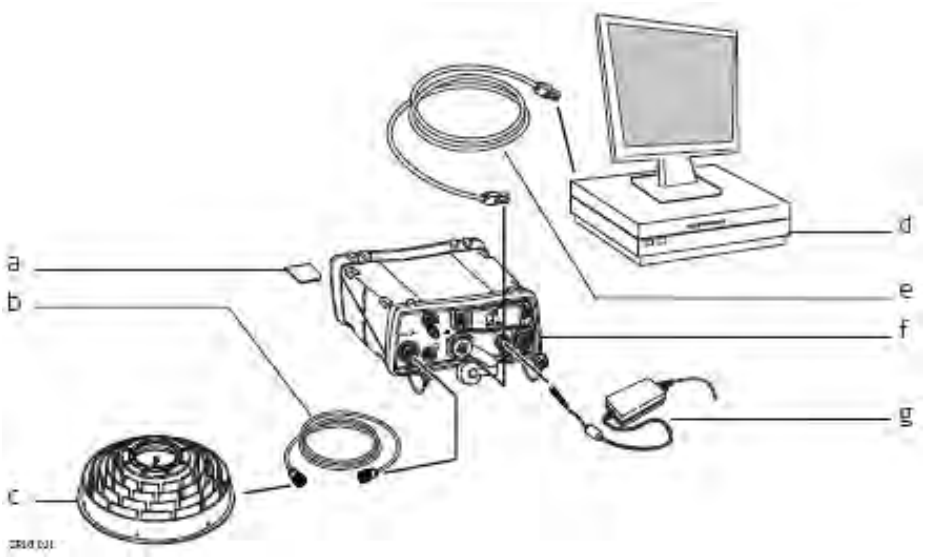

a. SD card*
b. Antenna cable
c. GNSS antenna
d. Computer running Web interface or Leica GNSS Spider
e. Ethernet or USB cable
f. GR/GM receiver
g. Power supply

* GR/GM receivers can be operated without SD card but then only data streaming will be possible.

Main components

Component	Description
GR/GM receiver	To provide the storage and streaming of raw satellite data.
Antenna	To receive the satellite signals from the GNSS (Global Navigation Satellite System) satellites.
Web interface	Web-based tool to configure the GR/GM receiver. *
Leica GNSS Spider	The reference station software including comprehensive receiver control and configuration, file download and firmware upload functions which support working with Leica GR/GM receivers. Supports connection to single or multiple reference instruments simultaneously.

* The GR25/50 features a screen and buttons which can be used for initial instrument setup or minor configuration changes in the field.

Unpacking the instrument

Delivery box for GR/GM receivers

The minimum items delivered with the GR/GM receivers include:

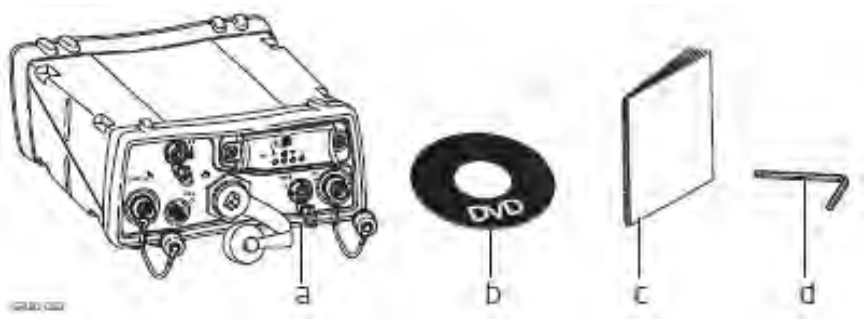

a. GR/GM receiver
b. Digital storage device
c. GR/GM User Manual

d. Allen key (GR25/50 only)

Accessories

Additional equipment such as cables, antennas and power supply required for a complete reference station installation are delivered with the GR/GM receiver when ordered.

The GNSS Reference Station Components shows a typical reference station installation and the accessories that can be ordered.

For further information on accessories please refer to the **GNSS Reference Station Equipment List**.

Instrument Components

Instrument Components: GR10/30 & GM10/30

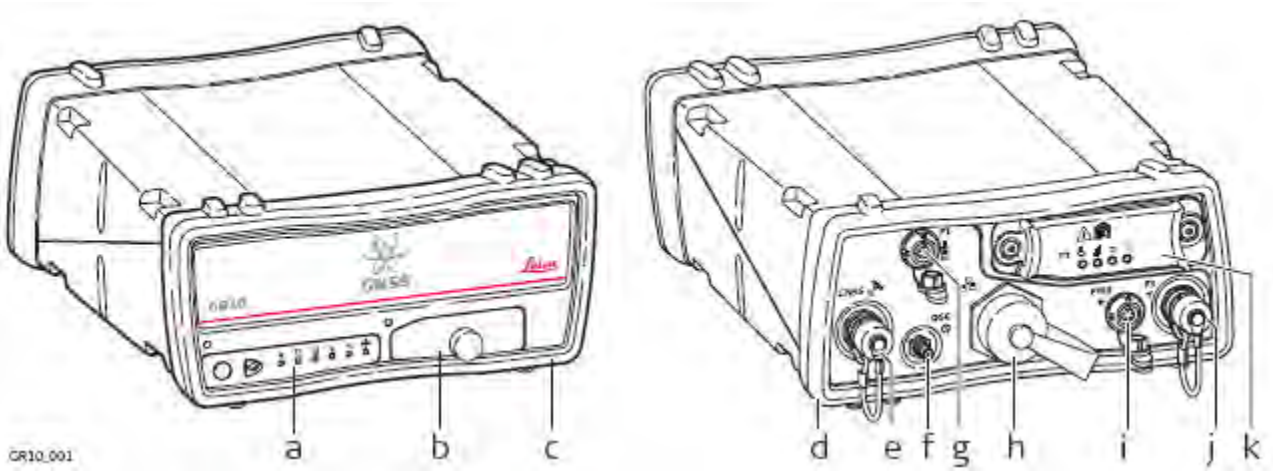

a. User interface
b. USB and SD card cover
c. Front rubber bumper
d. Back rubber bumper
e. GNSS Antenna port
f. External Oscillator port
g. Serial port (P1)
h. Ruggedised Ethernet port
i. Power port
j. Communication Slot-in port Antenna (P3)
k. Communication Slot-in port (P3)

Related topics

Ports & Pin Assignments: GR10/30 & GM10/30

Instrument Components GR25/50

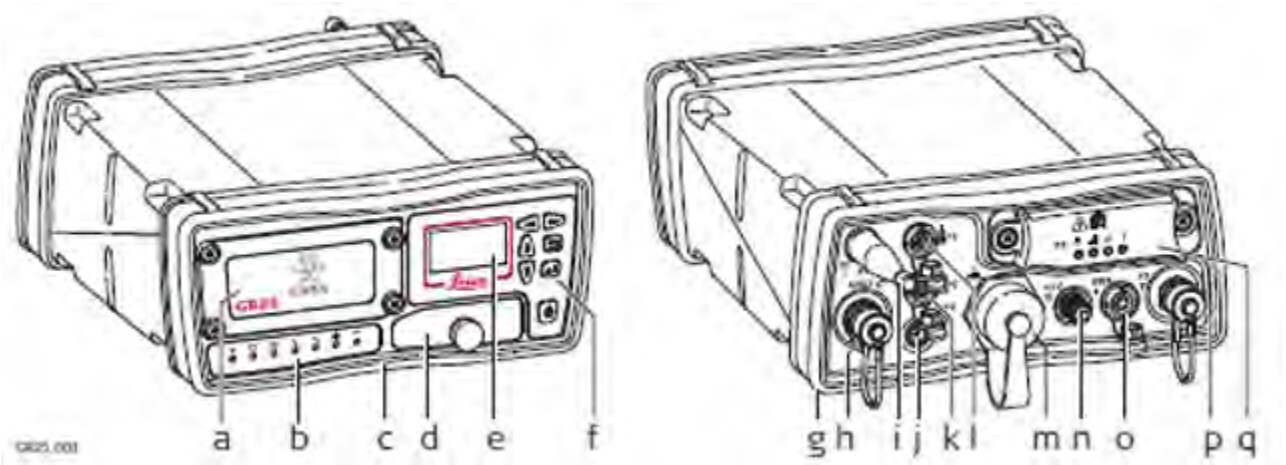

a. Battery cover
b. LED's
c. Front rubber bumper
d. USB and SD card cover
e. Display
f. Buttons
g. Back rubber bumper
h. GNSS Antenna port
i. Bluetooth or WLAN Antenna
j. PPS port
k. Serial and Event in port (P2)
l. Serial port (P1)
m. Ruggedised Ethernet port
n. External Oscillator port
o. Power port
p. Communication Slot-in port Antenna (P3)
q. Communication Slot-in port (P3)

Related topics

Ports & Pins Assignments: GR25/50

Operation

The GR/GM receivers can be operated by:

- pressing its buttons
- the display (GR25/50 only).
- the Web interface
- Leica GNSS Spider software
- or with the Leica Binary 2 (LB2) interface. Contact your Leica Geosystems representative for information on LB2 documentation.

The GR/GM receivers are delivered with default settings which cover the needs of the typical user. Use the Web interface or Leica GNSS Spider to adjust the settings.

Operation by Web interface

The Web interface is the main component used to configure and operate the instrument. A detailed description of every Web Interface page is included in the **Context sensitive help** section.

Supported operating systems for the Web Interface

- Windows Server 2008 SP1 (64 bit)
- Windows 7 Ultimate (32 bit & 64 bit)

Support internet browsers for the Web Interface

Browser	Supported version
Internet Explorer	7 and higher
Mozilla Firefox	3.5 and higher
Opera	10 and higher
Safari	4 and higher
Google Chrome	4 and higher

The Web interface is the primary interface between the user and the instrument. To use the Web interface correctly make sure the web browser allows JavaScript to be run. Check the web browsers settings if you have problems using the Web interface.

Web interface security

When accessing the Web interface for the first time use the default **User name** (Admin) and **Password** (12345678).

For security reasons, it is recommended to create a new administrator account when logged in for the first time. After creating the new administrator, log out and relogin with the new user credentials. The default user account can then be deleted.
Refer to the Access the web interface for the first time and change the default user for a step-by-step guide.

Operation by Leica GNSS Spider

The reference station software Leica GNSS Spider provides some of the same instrument operation functionality as the Web interface.

Some configuration settings are available both in the Web Interface and in Leica GNSS Spider. If such settings are configured in the Web interface, and then an **Upload Settings** or **Start** is done from GNSS Spider, these will be overwritten. In this case use the Web interface exclusively for settings that are not available in GNSS Spider.

To operate Leica GNSS Spider, refer to the

- **GNSS Spider / Remote Access** for basic information.
- **Leica GNSS Spider Online Help** for advanced information.

Requirements

- GR10/30: Leica GNSS Spider v4.0 or later must be installed.
- GR25/50: Leica GNSS Spider v4.2 or later must be installed.

- GM10/30: Leica GNSS Spider v4.3 or later must be installed.

The version requirement applies to active instrument connections to configure the instrument by Leica GNSS Spider. It does not apply to passive connections for data streaming only.

GNSS Spider Features

- Simultaneous configuration and communication with one or many instruments.
- Monitoring and messaging on instrument key parameters such as power voltage level, data storage availability, instruments internal temperature or events logged on the receiver.
- Visualisation of satellite tracking status.
- Transfer raw data automatically from the instrument to a central data storage.
- Perform RINEX conversion manually or automatically at different decimation rates and file lengths.
- FTP push archived data to multiple locations.
- Perform automatic quality control of archived RINEX data.
- Manage a whole network of reference stations.
- Supply single base or network RTK corrections to many users using a variety of communication methods incl. e.g. Ntrip.
- Protect and manage access to RTK correction services using the Spider Business Center advanced user access management.

Related topics

Keyboard
Web Interface: Overview
GNSS Spider / Remote Access

Software: Overview

All receivers use the same software concept.

Software type	Description
GR/GM firmware **(GRxx_x.xx.xxx.fw)** **(GMxx_x.xx.xxx.fw)**	The receivers firmware is called RefWorx. This important system software covers the basic functions of the instrument. The onboard Web interface is integrated into the firmware and cannot be deleted. The English language is integrated into the firmware and cannot be deleted. The firmware can also be installed as a zipped file. The receiver will automatically unzip the file before the installation. For an automatic upload and installation of the firmware, the original file name as released by Leica Geosystems must not be changed.
Language software **(REF_LANG.sxx)**	Various languages are available for the web server. Language software is also referred to as system language. English is the default language and cannot be deleted. Many different language files can be loaded onto the SD card but only one language is chosen at a time as active language. During a firmware upgrade the receiver reverts to English and all language files are deleted. After the upgrade load the new language version as needed.

Software upload

Software for	Description
All GR/GM receivers	All software is stored in the System RAM of the instrument. A new firmware file must be uploaded to the SD card before installation. The file can be uploaded via: • the Web interface. • direct copy to the SD card using a computer. • direct FTP access to the SD card. After uploading, the firmware must be transferred from the SD card to the System RAM via the Web interface. For detailed step-by-step instructions, refer to Firmware upgrade step-by-step. Leica GNSS Spider can also be used to install the firmware. Loading the firmware to the SD card and installing it on the instrument is done in one step when using GNSS Spider. Refer to the **Leica GNSS Spider Online Help** for more information.

Receiver Information

Important information regarding the instrument details, installed options and firmware can be found on the **Status / Receiver Information** page on the Web interface.

Related topics

Is my firmware up to date?
Firmware upgrade step-by-step
Firmware upgrade using Leica GNSS Spider
Loading a Language file
Status: Receiver Information
Receiver setup: Firmware management
Receiver setup: Language management

Power Supply

General

Use the Leica Geosystems power supplies, batteries, chargers and accessories or accessories recommended by Leica Geosystems to ensure the correct functionality of the instrument.

Power options

Power for the instrument can be supplied either by power supply or batteries.
Up to two external power supplies can be connected using a Y-cable.

Internal power supply: For the GR25/50 only, GEB241 (754834) battery for internal power supply. Battery can be charged from an external power source.

External power supply: GEV242 (774437), 110 V/240 V AC to 24 V DC power supply unit, supplied by Leica Geosystems.

OR

GEV251 (722409), 110 V/240 V AC to 12 V DC power supply unit, supplied by Leica Geosystems

OR

GEB171 (439038) battery connected via a cable.

OR

Car battery connected via a converter cable supplied by Leica Geosystems.

OR

For the GR25/50 only, Power over Ethernet via a category 5 Ethernet cable or higher to supply 13W of power over Ethernet.

Y-cable: GEV243 (774438), Y-cable can be used with GEV238 power supply and GEB171 battery or the existing 12 V power supply (722409). The black Lemo connector on this cable only supports the use of the GEV238 power supply.

OR

GEV172 (733298), Y-cable can be used with any combination of 110 V/240 V AC to 12 V DC power supply (722409) or a GEB171 battery.

When using the GR10/30 or GM10/30 for permanent operations use **U**ninterruptible **P**ower **S**upply units as a back-up in a main power failure.

The GR25/50 has a built-in battery and charger that can act as a short **U**ninterruptible **P**ower **S**upply. For long-term protection against power failure, an external **U**ninterruptible **P**ower **S**upply can also be used.

3: Installation

Installation: Overview

Menu option	Description
Before Installation	A detailed list of things to consider before installing the instrument, including • Installation location • Installation orientation • Cable installation
Installation options	Detailed diagram of possible installations • Rack mount • Wall / Cabinet Mount • Free Standing / Stacking • Tripod

A detailed description of every Web Interface page is included in the **Context sensitive help** section.

Before Installation

Installation location

It is recommended that the instrument is installed so that it is

- protected from mechanical influences and lightning.
- within 70 m of the antenna, without the need to use inline amplifiers.
- located sufficiently far enough away from potential sources of radio frequency interference. High-power signals from nearby radio, radar or GSM/GPRS/UMTS cell towers can cause problems with GNSS tracking. Such interference is not harmful to the instrument but could cause a loss of GNSS data.

Installation orientation

- For inside assembly, the instrument can be installed in any direction
- When installing the instrument outside, orientate the instrument vertically so that the connector points are pointing downwards

Cable installation

Ensure that the cables between the instrument and antenna are positioned to prevent them from becoming bent, stretched or squeezed. For the installation of the cables, the general rules for the installation of electrical wiring apply.

Please consider that a well-planned and thoroughly carried out electric installation not only protects the cables against damage, but also looks professional.

For detailed installation information, refer to the **GNSS Reference Station and Networks - An Introductory Guide**.

Related topics

Installation Options

Description

GR/GM receivers are designed for various installation cases. Below is a short description of four possible installation setups. Please note that the diagrams do not show all the equipment required for a complete reference station installation. For full installation details, please refer to the

- GNSS Reference Station and Networks - An Introductory Guide.
- GNSS Networks and Reference Stations Equipment List

Rack Mount

Together with the rack mount accessory kit the instrument can be easily mounted into a standard 19 inch IT rack.

- If space in the rack is limited, then the rubber bumpers on the instrument can be removed. The total height of the rack kit and instrument is then 2U. If the bumpers are removed, please remove the small feet from the mounting brackets.
- The radio/GSM antenna must be installed on the outside of the rack if a slot-in radio or GSM device is used. Attach the Radio/GSM antenna cable to port P3.

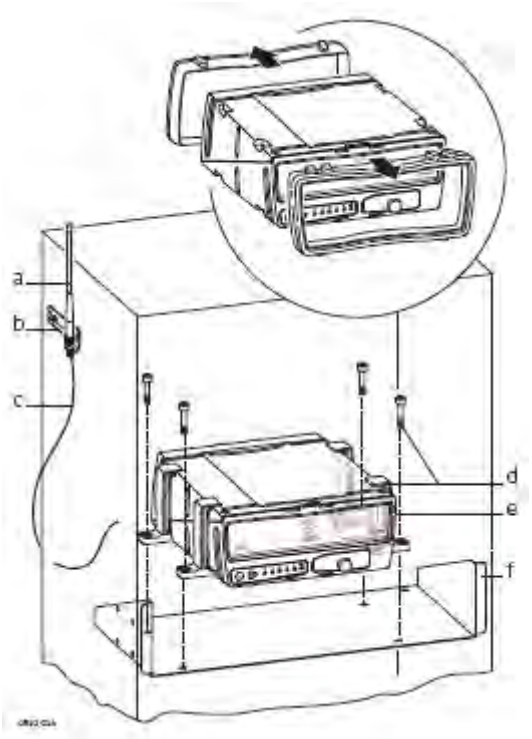

a. Radio/GSM antenna
b. Antenna bracket
c. Radio/GSM antenna cable
d. Wall mount accessory - screws
e. GR/GM receiver
f. Rack accessory
g. Wall mount accessory - bracket

Wall / Cabinet Mount

Together with the wall mount accessory kit the instrument can be easily mounted onto an existing wall or structure, or inside an environmental case.

- If space in the cabinet is limited, then the rubber bumpers on the instrument can be removed. If the bumpers are removed, please remove the small feet from the mounting brackets.

- The radio/GSM antenna must be installed on the outside of the rack if a slot-in radio or GSM device is used. Attach the Radio/GSM antenna cable to port P3.

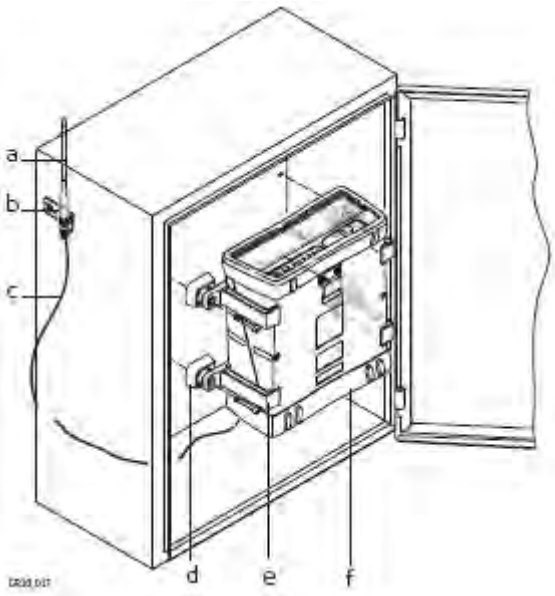

a. Radio/GSM antenna
b. Antenna bracket
c. Radio/GSM antenna cable
d. Wall mount accessory - bracket
e. Wall mount accessory - screws
f. Rubber bumper

Free Standing / Stacking

The instrument is designed to allow free standing installation and stable stacking for easy configuration of multiple receivers.

- When stacking multiple instruments on top of each other, the rubber bumpers should be attached.

Tripod

The instrument has a built-in Tripod mount to allow attachment to all Leica Geosystems Tripods.

- When using the instrument on a tripod, the rubber bumpers must be on.

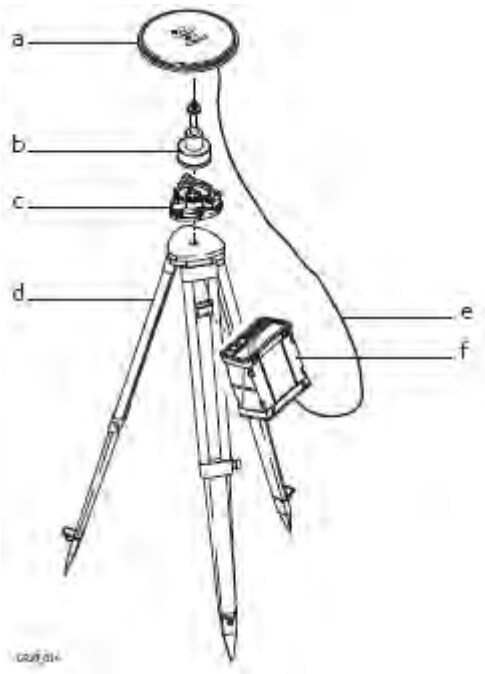

a. AS10
b. GNSS antenna carrier with 5/8 inch screw
c. Tribach
d. Tripod
e. Antenna cable
f. GR/GM receiver

Related topics

Before Installation
Description of the system: Overview

4: User Interface

User Interface - Overview

Menu option	Description
GR10/30 & GM10/30	LED Indicators on GR10/30 & GM10/30 A detailed overview of the LED indicators and their status. Keyboard A detailed overview of the buttons. • ON/OFF button • Function button • Button combinations USB and SD Card Cover A detailed overview of the USB and SD card slot.
GR25/50	LED Indicators on GR25/50 A detailed overview of the LED indicators and their status. Keyboard A detailed overview of the buttons. • ON/OFF button • Arrow buttons • Cancel button • Enter button USB and SD Card Cover A detailed overview of the USB and SD card slot.
Web Interface	Web Interface: Login Web interface: User Interface A detailed overview of the layout of the web interface and a brief description of the major components.

GR10/30 & GM10/30

LED Indicators on GR10/30 & GM10/30

The GR10/30 & GM10/30 have Light Emitting Diode indicators. They indicate the basic instrument status.

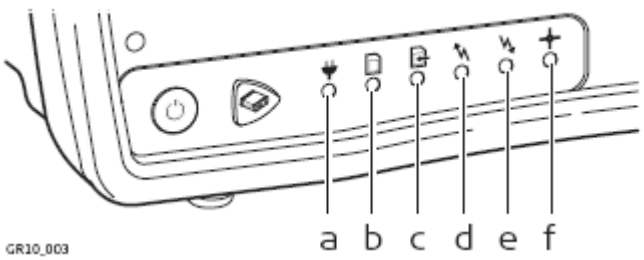

a. Power LED
b. SD card LED
c. Raw data logging LED
d. RT out data stream LED
e. RT in data stream LED
f. Position LED

Description of the LED's

IF the	is	THEN
Power LED	off	The instrument is turned off.
	green	The instrument is turned on.
SD card LED	off	No SD card inserted or power is off.
	green	SD card is inserted. The free space on the SD card is greater than 20%.
	yellow	The free space on the SD card is below 20%. **Recommended user action:** Activate the Smart clean-up or the automatic file delete for each logging session.
	red	SD card is full. Data logging has stopped. **Recommended user action:** Immediately activate the Smart clean-up or the automatic file delete for each logging session.
Raw data logging LED	off	No active logging sessions or power is off.
	green	Active logging sessions are configured on the instrument and data is being logged.
	yellow	Active logging sessions are configured but Smart clean-up is deleting data from all or some of the configured logging sessions. OR Active logging sessions are configured but no position is available. **Recommended user action:** Check the remaining space on the SD card and delete old data if necessary. Check the tracking and position status.
	red	Active logging sessions are configured but the SD card is full or no satellites are tracked. **Recommended user action:** Check the SD card and the tracking status.
RT out data stream LED	off	No active real time out data stream or power is off.
	green	One or more real time data streams are configured and active. Data is being streamed.
	red	Data streams are active but no data is streamed. **Recommended user action:** Check that data is tracked and a navigated position is available. Check that the correct reference position is entered.

RT in data stream LED	off	No active real time in data stream or the sensor is turned off.
	green	A real time in data stream is configured and active, data is received and a fixed position is available.
	flashing green	A real time in data stream is configured and active, data is received, a DGPS position is available.
	yellow	A real time in data stream is configured and active, data is received but no fixed or DGPS position is available.
	red	There is an active real time data stream available, but no data is received (e.g. connection to reference lost).
Position LED	off	The instrument is switched off.
	green	A navigated position is available.
	flashing green	The instrument is tracking satellites but no position is available.
	red	No satellites are tracked and no navigated position is available.

Keyboard: GR10/30 & GM10/30

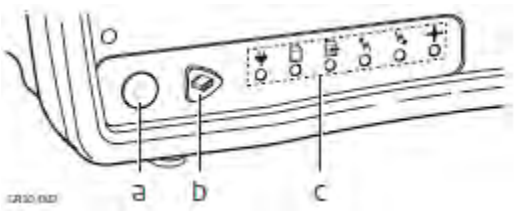

a. ON/OFF button
b. Function button
c. LED's

The instrument can be turned on and off by holding down the ON/OFF button for 2 s. A green steady light at the power LED indicates that the instrument is turned on and ready.

ON/OFF button

Button	Function
ON/ OFF	If receiver is off: Turns on the receiver when held for 3 s. If receiver is on: Turns off the receiver when held for 3 s.

Hold the ON/OFF button for 10 s, to force the instrument to turn off. Instrument settings and some data can be lost when using this method.

Function button

All the following functions described assume the receiver is already on.

Button	Function
Function	The Function and ON/OFF button work in combination and allow a number different functions as described in Button combinations. The Function button switches between these different functions.

Button combinations

Function
Activate dual button functionality Press and hold both buttons until all LEDs are flashing. After 1 s the Raw data logging LED starts flashing slowly. The following instrument commands are now activated.
Start/Stop all logging sessions Activate dual button functionality as described above. If all logging sessions had been off, the Raw data logging LED is flashing green. • Press the Function button until the LED flashes quickly to START all configured logging sessions if the Raw data logging LED is flashing green. OR If any logging session had been active, the Raw data logging LED is flashing red. • Press the Function button until the LED flashes quickly to STOP all active logging sessions if the Raw data logging LED is flashing red. After logging has been started or stopped, the LED and instrument functionality goes back to general behaviour.
Start/Stop all data streams Activate dual button functionality as described above. Press the Function button until the RT out data streams LED starts flashing slowly: If all data streams had been off, the RT out data stream LED is flashing green. • Press the Function button until the LED flashes quickly to START all configured data streams if the RT out data steam LED is flashing green. OR If any data stream had been active, the RT out data stream LED is flashing red. • Press the Function button until the LED flashes quickly to STOP all active data streams if the RT out data stream LED is flashing red. After data streams have been started or stopped, the LED and instrument functionality goes back to general behaviour.
Initialise the measurement engine Activate dual button functionality as described above. Press the Function button until the Position LED starts flashing slowly: • Press the Function button for until the LED flashes quickly to reset the measurement engine. This will delete all almanac and ephemeris information and the instrument will take a few minutes to restart tracking satellites. After the measurement engine has been initialised, the LED and instrument functionality goes back to general behaviour.
Format the receiver settings Activate dual button functionality as described above. Press the Function button until the Power LED starts flashing slowly: • Press the Function button until the LED flashes quickly to set all configured instrument settings back to factory default values. After the system format is completed, the LED and instrument functionality goes back to general behaviour.

Format the SD card Activate dual button functionality as described above. Press the Function button until the SD card LED starts flashing slowly: • Press the Function button for until the LED flashes quickly to format the SD card. After the SD card format is completed, the LED and instrument functionality goes back to general behaviour.
Exit combined button functionality • Use the buttons functionality as described above. OR • Press the Function button until all LEDs stop flashing.

USB and SD Card Cover: GR10/30 & GM10/30

The GR10/30 & GM10/30 have a USB port and an SD card slot.

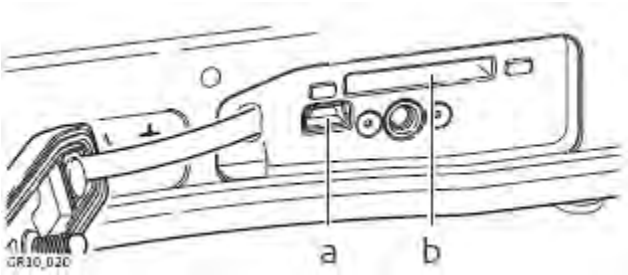

a. USB port
b. SD card slot

USB client port

The USB port can be used:

- to connect the receiver to a computer and access the Web interface and FTP server.
- to connect the receiver to a CS10/CS15 field controller and access the Web interface.

SD card slot

Data is stored on a removable SD card. For more information on how to work with the SD card, refer to Working with the Memory Device.

If no SD card is inserted, data storage is not possible.

Unplugging connection cables or removing the SD card during data logging or streaming can cause loss of data. It is recommended to switch off the instrument before removing the SD card.

While other SD cards can be used, Leica Geosystems recommends only using Leica SD cards. Leica Geosystems is not responsible for data loss or any other error that can occur while using a non-Leica card.

SD cards can directly be used in the Leica USB Card Reader (767895 MCR7). Other computer card drivers can require an adaptor.

If formatting the SD card is necessary, we highly recommend to format the SD card on the instrument. Refer to the How to reset the receiver settings - Step-by-step format the SD card for detailed instructions.

SD card capacity

- Maximum supported capacity: 32 GB.

GR25/50

LED Indicators on GR25/50

The GR25/50 has Light Emitting Diode indicators. They indicate the basic instrument status.

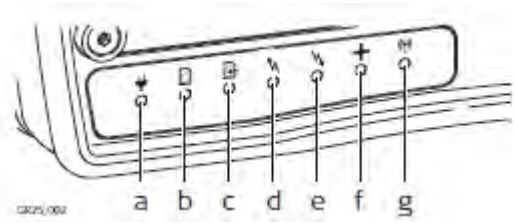

a. Power LED
b. SD card LED
c. Raw data logging LED
d. RT out data stream LED
e. RT in data stream LED
f. Position LED
g. Bluetooth LED

Description of the LED's

IF the	is	THEN
Power LED	off	The instrument is turned off.
	green	The instrument is turned on.
	flashing green	The instrument is on but has switched to a backup power source. If an internal battery is used, indicates that the remaining battery capacity is high.
	yellow	Only shown if using an internal battery. The remaining battery capacity is low. **Recommended user action:** Provide an alternative power source.
	flashing yellow	The internal battery is charging. Charging is only indicated by LEDs when the instrument is turned off. When the instrument is on, the LEDs indicate the current power level.
	red	Only shown if using an internal battery. The remaining battery capacity is critical. **Recommended user action:** Switch to a new power source immediately.

	flashing red	Charging of the internal battery is activated but there is an error in charging the battery. **Recommended user action:** Check and reattach the battery. If the problem does not disappear, please send the battery to Leica Geosystems Service. Charging is only indicated via LEDs when the instrument is turned off. When the instrument is on, the LEDs indicate the current power level. **Troubleshooting**: If the GR25/50 is off and the user tries to turn on the receiver but the configured power up voltage is higher than the current input voltage, the receiver will not boot. The power LED will flash three times to indicate the higher power up voltage. Please attached a higher voltage power source. OR Press and hold the power button until the power LED turns green (approximately 30s). This will overwrite the configured power up voltage.
SD card LED	off	No SD card inserted or power is off.
	green	SD card is inserted. The free space on the SD card is greater than 20%.
	flashing green	Use of external USB drive is configured but the device is not available. Data is written to the SD card. The free space on the SD card is greater than 20%.
	yellow	The free space on the SD card is below 20%. **Recommended user action:** Activate the Smart clean-up or the automatic file delete for each logging session.
	flashing yellow	Use of external USB drive is configured but the device is not available. Data is written to the SD card. The free space on the SD card is below 20%.
	red	SD card is full. Data logging has stopped. **Recommended user action:** Immediately activate the Smart clean-up or the automatic file delete for each logging session.
Raw data logging LED	off	No active logging sessions or power is off.
	green	Active logging sessions are configured on the instrument and data is being logged

	yellow	Active logging sessions are configured and Smart clean-up is deleting data from all or some of the configured logging sessions. OR Active logging sessions are configured but no position is available. **Recommended user action:** Check the remaining space of the SD card and delete old data if necessary. Check the tracking and position status.
	red	Active logging sessions are configured but the SD card is full or no satellites are tracked. **Recommended user action:** Check the SD card and the tracking status.
RT out data stream LED	off	No active data stream is configured or power is off.
	green	One or more data streams are configured and active. Data is being streamed.
	red	Data streams are active but no data is streamed. **Recommended user action:** Check that data is tracked and a navigated position is available. Check that the correct reference position is entered.
RT in data stream LED	off	No active real time in data stream or the sensor is turned off.
	green	A real time in data stream is configured and active, data is received and a fixed position is available.
	flashing green	A real time in data stream is configured and active, data is received, a DGPS position is available.
	yellow	A real time in data stream is configured and active, data is received but no fixed or DGPS position is available.
	red	There is an active real time data stream available, but no data is received (e.g. connection to reference lost).
Position LED	off	The instrument is switched off.
	green	A navigated position is available.
	flashing green	The instrument is tracking satellites but no position is available.
	yellow	An external oscillator is configured with the oscillator fallback option active. No time signal was detected for more than 5 minutes from the external clock or the antenna was disconnected for more than 5 minutes. The receiver is now using the internal clock instead of the selected external oscillator.
	red	No satellites are tracked and no navigated position is available.
Bluetooth LED	off	No wireless signal (not configured or no connection established).

	blue	Bluetooth connection configured and connected.

Keyboard: GR25/50

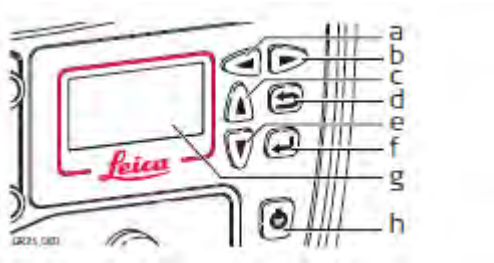

a. Left button
b. Right button
c. Up button
d. Cancel button
e. Down button
f. Enter button
g. Display
h. ON/OFF button

The instrument can be turned on and off by holding down the ON/OFF button for 3 s. A green steady light at the power LED indicates that the instrument is turned on and ready.

ON/OFF button

Button	Function
ON/ OFF	If receiver is off: Turns on the receiver when held for 3 s. If receiver is on: Turns off the receiver when held for 3 s.

Hold the ON/OFF button for 10 s, to force the instrument to turn off. Instrument settings and some data can be lost when using this method.

Arrow buttons

Button	Function
Left/Right **Up/Down**	To scroll through menus and configuration options. For editable fields use the arrow buttons for scrolling and selecting alphanumeric fields.

Cancel button

Button	Function
Cancel	To exit pages without storing changes.

Enter button

Button	Function
Enter	To select menu items, open new pages and select options.

Display: GR25/50

Display menu structure

The following functionality is available via the receiver display.

Main Menu

¦

¦--- **Status**

¦ ¦

¦ ¦---------- **Server Info** — Select to view receiver information. Use the up and down buttons to toggle between the 2 pages.

¦ ¦ ¦

¦ ¦ ¦

¦ ¦ ¦---------- Serial no, Maintenance Date, Firmware version

¦ ¦ ¦---------- ME Firmware version, OS Firmware version

¦ ¦

¦ ¦---------- **Position** — Select to view the Reference position or the current Navigated position. Use the left and right button to switch between Cartesian and Geodetic coordinates

¦ ¦ ¦

¦ ¦ ¦------- Reference Position

¦ ¦ ¦------- Navigated Position

¦ ¦

¦ ¦---------- **Tracking** — View the number of satellites tracked for each active satellite system and all active frequencies. Use the up and down buttons to scroll between the satellite systems.

¦ ¦ ¦

¦ ¦ ¦------- Number of satellites tracked for GPS

¦ ¦ ¦------- Number of satellites tracked for GLO

¦ ¦ ¦------- Number of satellites tracked for GAL

¦ ¦ ¦------- Number of satellites tracked for SBAS

¦ ¦

¦ ¦---------- **Power/Memory** — View the status of the currently used Power supply and the available space left on the SD card and USB storage device if used.

¦ ¦

¦ ¦------- Power

¦ ¦------- Memory

¦

¦

¦--- **Configuration**

```
¦
¦---------- Site Config
¦           ¦------- Site code
¦           ¦------- Antenna type
¦           ¦------- Antenna height
¦
¦---------- Logging sessions
¦           ¦
¦           ¦------- Overveiw page
¦           ¦------- List of configured sessions
¦
¦---------- Data streams
¦           ¦
¦           ¦------- Overveiw page
¦           ¦------- Activate/Deactivate All
¦
¦---------- Network Config (Bluetooth receivers)
¦           ¦
¦           ¦
¦           ¦------- Ethernet
¦           ¦       ¦------- Hostname
¦           ¦       ¦------- DHCP
¦           ¦       ¦------- IP address
¦           ¦       ¦------- Subnet
¦           ¦       ¦------- Gateway
¦           ¦------- Bluetooth
¦
¦---------- Network Config (WLAN receivers)
¦           ¦
¦           ¦------- Ethernet
¦           ¦       ¦------- Hostname
¦           ¦       ¦------- DHCP
¦           ¦       ¦------- IP address
¦           ¦       ¦------- Subnet
¦           ¦       ¦------- Gateway
¦           ¦------- WLAN
¦                   ¦------- WLAN radio
¦                   ¦------- WLAN profiles
¦
¦---------- Maintenance
            ¦
            ¦
            ¦------- Format SD card
            ¦------- Format USB device
            ¦------- Format System
```

Select to edit site code, antenna type and antenna height.

Select to activate or deactivate configured logging sessions. Use right and left buttons to activate or deactivate a session.

Select to activate or deactivate all configured data streams. Use right and left buttons to activate or deactivate all sessions.

Edit the GR25/50 hostname. This is also the Bluetooth name. Edit the Ethernet settings (DHCP on/off, IP address, subnet mask, gateway) or enable/disable the Bluetooth device.

Edit the GR25/50 hostname, the Ethernet settings (DHCP on/off, IP address, subnet mask, gateway) or the WLAN settings.

Format the receiver configuration, SD card or attached USB storage device or stop the USB storage device to remove. Initialize the ME. Use the up or down button to switch between the maintenance functions.

¦------- Stop USB Device

¦------- Initialize ME

How to navigate and edit settings in the Display

I want to	Description
Open a page	Use the **up/down** buttons to navigate to the menu item. Press the **enter** button to open the page. 
Leave a page	Press the **Cancel** button in any page to navigate to the previous page in the menu.
Enable/Disable a setting	The status of a configured setting is indicated by disabled or enabled. Use the **left button** to enable a setting. Use the **right button** to disable a setting. 
Select list item	Use the **up/down** buttons and the **Enter** button to select a value. The currently active value is marked by the box around it. 
Enable/Disable logging session	Use the **left/right** buttons to activate or deactivate an existing logging session. 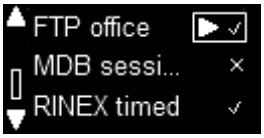
Activate/Deactivate all data streams	**Step** / **Description** **1** — The Data steams overview page shows the number of active and inactive data streams. Press the **Enter** button. 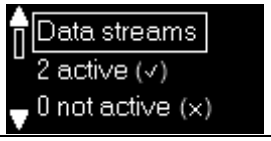 **2** — Press **Enter** to get to the Activate/Deactivate all page. Select the proper option using **up/down** buttons and press **Enter**. 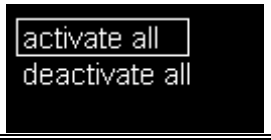

	3	Press **OK** to confirm or **Cancel** to abort. 

Edit a setting

Step	Description
1	Navigate to the setting using the **Enter** button to open the page and the **up/down** buttons to select the setting. 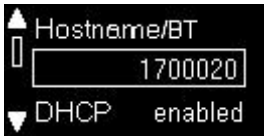
2	Press **Enter** to activate the edit mode. Note that the left most character is underlined. 
3	Use the up/down button to scroll through all available numbers/characters, hold the key to scroll faster. Press the left or right button to switch to the next character to edit. 
	OR Press the left or right button for 2s to insert a character to the left or right. 
4	On the furthest left or right character, use the left or right button to add an additional character at the beginning or end.  -> 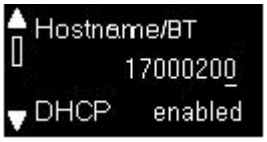
5	Press Enter to finish the entry. 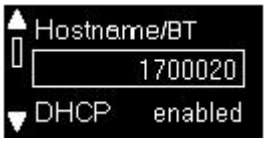

USB and SD Card Cover: GR25/50

The GR25/50 has a USB port and an SD card slot.

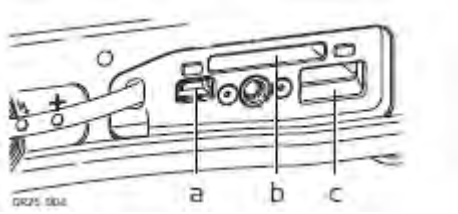

a. USB client port
b. SD card slot
c. USB host port

USB client port

The USB port can be used:

- to connect the GR25/50 to a computer and access the Web interface and FTP server.
- connect the GR25/50 to a CS10/ CS15 Field controller and access the Web interface.

USB host port

The USB host port can be used to:

- connect a USB mass storage device to the GR25/50 and push MDB and RINEX data from the SD card.

SD card slot

Data is stored on a removable SD card. For more information on how to work with the SD card, refer to Working with the Memory Device.

If no SD card is inserted, data storage is not possible.

Unplugging connection cables or removing the SD card during data logging or streaming can cause loss of data. It is recommended to switch off the instrument before removing the SD card.

While other SD cards can be used, Leica recommends to only use Leica SD cards and is not responsible for data loss or any other error that can occur while using a non-Leica card.

SD cards can directly be used in the Leica USB Card Reader (767895 MCR7). Other computer card drivers can require an adaptor.

If formatting the SD card is necessary, we highly recommend to format the SD card on the instrument. Refer to the How to reset the receiver settings - Step-by-step format the SD card for detailed instructions.

SD card capacity

- Maximum supported capacity: 32 GB.

Web interface

Web Interface: Login

Entering the receivers IP address or hostname in a browser window always displays the web interface login page.

- For a partially restricted web interface access, the login as guest button can be used. This login allows access to all Status information.
- The login page is not shown if the web interface access level is set to unrestricted. The web interface home page is opened directly. For security reasons it is not recommended to set the web interface access to unrestricted.
- To change the access setting, go to **Receiver Setup / Access Management / Access settings**.

Web interface: User Interface

By default Java Script is activated in all browsers. If it is deactivated in your browser, you may not be able to display and use all web interface functionality. We recommend to have Java Script active when using the Web interface.

The basic Layout of the web interface is the same on all pages. On the top is the web interface header that contains receiver site code, installed firmware version and the current system time. Below is the menu bar, which is used to navigate in the web interface.

Below on the right is the Status block that summarizes the most important receiver functionality information. This status block is visible on every page.

Left of the status block is the content area. This contains the actual information for this page, e.g. status information, a configuration page or links to receive support and information directly from Leica Geosystems AG.

Update rates for each element in the status block is as follows: Event log: 5s, Tracking block: 10s, General block: 15s.

The default appearance of the Web interface consists on the following main components:

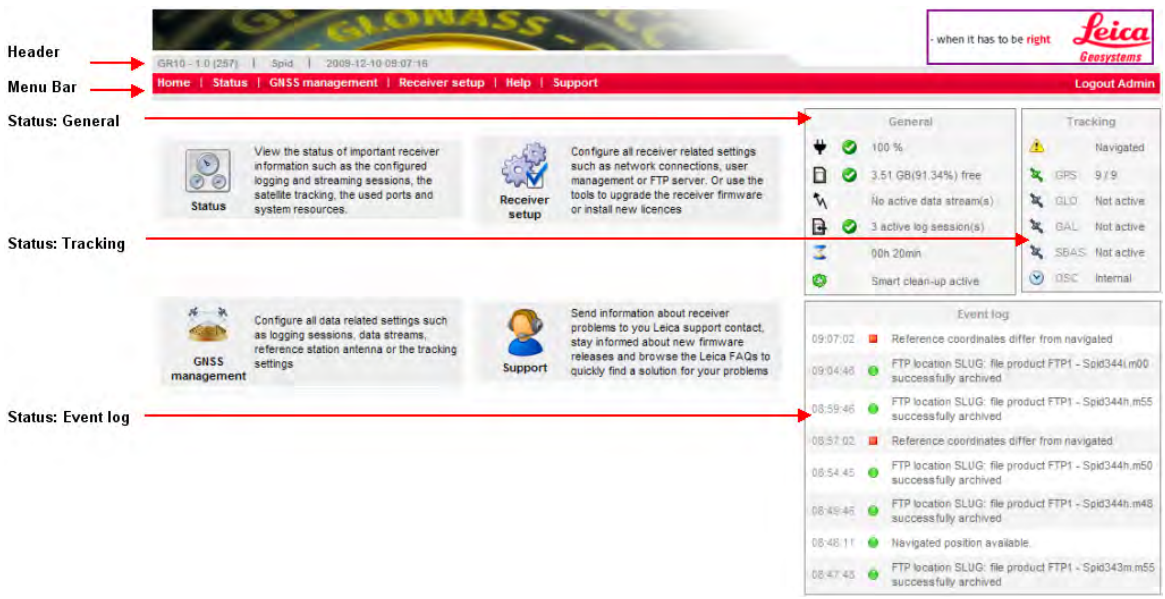

Web interface components

Header

The header contains general information about the receiver, including

- Receiver type
- Loaded firmware version.
- Site code
- Current system date and time.

Menu Bar

The menu bar is a special tool bar at the top of the screen that contains links for the home page, all status information, GNSS management pages, receiver setup, a help link and the support pages. The menus are extended when the mouse is moved over a menu item. When clicking on one of the menu items, a site map is displayed listing all links contained in that menu.

If a link is not available to the logged in user, it is grayed out and not accessible. Which menu items are available depends on

- whether the **Access to Web interface is** set to Unrestricted, Partially restricted or Fully restricted, and
- the selected **Web interface user level** of the logged in user.

Menu item	Description
Home	Press to return to the overview page.
Status	View the status of important receiver information, such as the configured logging sessions and data streams, the satellite tracking, an overview of the ports in use and the power and memory available.
GNSS Management	Configure all GNSS data related settings, such as logging sessions, data streams and the tracking settings. Or enter site specific information such as the site name, position and antenna details.
Receiver setup	Configure all receiver related settings such as network connections, Leica GNSS Spider remote access ports and the user management. Or use the tools to upgrade the receiver firmware, add new option keys or switch to your preferred language.
Help	Access the complete web interface online help. Go to How to display and use the Online Help for further information.
Support	Send receiver information and questions to your Leica support contact, stay informed about new firmware releases or browse the Leica FAQs to quickly find a solution for common questions.
Logout	Select to logout of the web interface and return to the main login page.

Click here to view the complete Directory structure of the Menu Bar.

Status: General

The General box in the Status block provides an overview of the current status of the receiver.

- The General box is updated every 15 seconds.
- The icons correspond to the LED Indicators: GR10/30 & GM10/30 / LED Indicators: GR25/50 on the receiver.

<table>
<tr><th>Icon</th><th>Description</th></tr>
<tr><td></td><td>
Internal battery
The internal battery status is shown with an icon and the current voltage level.
<table>
<tr><td></td><td>Battery charging is not enabled.</td></tr>
<tr><td></td><td>Battery charging is enabled.</td></tr>
<tr><td></td><td>Internal battery inserted. Charging is enabled and active.</td></tr>
<tr><td></td><td>Internal battery inserted. The remaining capacity of the battery is high.</td></tr>
<tr><td></td><td>Internal battery inserted. The remaining capacity of the battery is becoming low.
Recommended user action: Consider enabling charging or replace the current battery.</td></tr>
<tr><td></td><td>Internal battery inserted. The remaining capacity of the battery is critical or a battery error has been detected.
Recommended user action: The user should urgently switch to a new battery or enable charging.</td></tr>
</table>
</td></tr>
<tr><td></td><td>
Power status
The power status is shown with an icon and the current voltage level.
<table>
<tr><td></td><td>GR25/50:
The primary power supply is in use and that the power level is valid (voltage is between the configured power up and power down level).

GR10/30:
The power level of the connected power source is high.</td></tr>
<tr><td></td><td>GR25/50:
The receiver has switched to the secondary power supply

Recommended user action: Consider providing a new power source to replace the current one.

GR10/30:
The power level of the connected power source is be-coming low.
The icon indicates the overall power status. If a second power source is connected via a Y-cable, both power sources are used.

Recommended user action: Consider providing a new power source to replace the current one.</td></tr>
<tr><td></td><td>GR10/30:
The power level of the connected power source is critical.

Recommended user action: The user should urgently switch to a new power</td></tr>
</table>
</td></tr>
</table>

	source.

SD card status

The SD card status (icon) and the available space on the SD card MB(%) are shown.

	SD card is inserted. The free space on the SD card is greater than 20%.
	The free space on the SD card is below 20%. **Recommended user action:** Activate the Smart clean-up or the automatic file delete for each logging session.
	The SD card is full. Data logging is stopped. **Recommended user action:** Immediately activate the Smart clean-up or the automatic file delete for each logging session.

GR25/50:

External USB drive status

The USB drive status (icon) and the available space on the USB drive MB(%) are shown.

	External USB drive is detected. The free space on the USB drive is greater than 20%.
	The free space on the USB drive is below 20%. **Recommended user action:** Exchange the external USB drive.
	The external USB drive is full. Data logging is continued until the SD card is full. OR The external USB drive is configured to be used but currently not detected. **Recommended user action:** Immediately exchange the external USB drive or detach and reattach the USB drive.

The external USB drive is not available on GR10/30 & GM10/30 receivers.

Data stream status

The data stream status is shown with an icon and the number of currently active incoming data streams.

	One or more data streams are configured and active. Data is being streamed.
	Indicates that the data streams are active but no data is streamed. **Recommended user action:** Check that satellites are tracked and a navigated position is available. Check that the correct reference position is entered.

Raw data logging status

The raw data logging status is shown with an icon and the number of currently active logging sessions.

	Active logging sessions are configured on the receiver and data is being logged.
	Active logging sessions are configured on the receiver but Smart clean-up is deleting data from all or some of the configured logging sessions. **Recommended user action:** Check the remaining space on the SD card and delete old data if necessary.
	Active logging sessions are configured but • The SD card is full or

	• No navigated position is available. **Recommended user action:** Check the SD card and the tracking status.
	The time since the receiver was turned on.
	This icon is only shown if the receiver is turned on because of an active wake-up session.
	Smart clean-up status Smart clean-up is active. Smart clean-up is inactive. Indicates active logging sessions are available and Smart clean-up is deleting data from all or some of these sessions. **Recommended user action:** Please check the remaining space on the SD card and delete old data if necessary.

Status: Tracking

The Tracking box provides an overview of the current tracking status of the receiver.

- All satellite systems are listed, independent of the installed option keys. For further information on option keys go to Tools / Options.
- For active satellite systems with a registered option key, the number of tracked satellites on L1 and the number of satellites available above the cut off angle is shown in the right column.
- Click on the number of tracked satellites for each satellite system to view a pop-up box with a detailed list of the tracked signals. Or click on the satellite icon to be redirected to the Status: Tracking page for this satellite system.
- The tracking box is updated every 10 seconds.

- **GPS - GPS satellite system pop-up information**

Sat. available	Number of GPS satellites available above the cut-off angle.
Tracked L1	Tracked GPS satellites on L1.
Tracked L2P	Tracked GPS satellites on L2P.
Tracked L2C	Tracked GPS satellites on L2C.
Tracked L5	Tracked GPS satellites on L5. GPS L5 tracking can only be activated when the GPS L5 option is installed on the receiver.

- **GLO - GLONASS satellite system pop-up information**

Sat. available	Number of GLONASS satellites available above the cut-off angle. GLONASS tracking can only be activated when the GLONASS option is installed on the receiver.
Tracked L1	Tracked GLONASS satellites on L1.
Tracked L2P	Tracked GLONASS satellites on L2P.
Tracked L2C	Tracked GLONASS satellites on L2C.

- **GAL - Galileo satellite system pop-up information**

Sat. available	Number of visible Galileo satellites available above the cut-off angle. Only available when the Galileo option is installed on the receiver
Tracked E1	Tracked Galileo satellites on E1.
Tracked E5a	Tracked Galileo satellites on E5a.
Tracked E5b	Tracked Galileo satellites on E5b.
Tracked ABOC	Tracked Galileo satellites on ABOC (Alt-Boc).

- **BDS - BDS Satellite system pop-up information**

Sat. available	Number of BeiDou satellites available above the cut-off angle. BeiDou tracking can only be activated when the BeiDou option is installed on the receiver.
Tracked B1	Tracked BeiDou satellites on B1.
Tracked B2	Tracked BeiDou satellites on B2.

- **QZSS -QZSS Satellite system pop-up information**

Sat. available	Number of QZSS satellites available above the cut-off angle. QZSS tracking can only be activated when the QZSS option is installed on the receiver.
Tracked L1	Tracked QZSS satellites on L1.
Tracked L2C	Tracked QZSS satellites on L2C.
Tracked L5	Tracked QZSS satellites on L5.

- **SBAS - Satellite Based Augmentation System**

Tracked L1	Tracked SBAS satellites on B1.

The table below describes the icons used in the Tracking box.

Section	Icon	Description
Position		**No position**, indicates that no navigated position is available. This is displayed after a reboot when the receiver has not started tracking yet. Check that an antenna cable is connected. **Navigated**, indicates that a navigated position is available but the configured reference position is more than 100m away from the navigated position. An error message is displayed in the event log. **User action:** Check the configured reference position.
		Navigated position available.
		Differential code position available.
		Phase fixed position available.
Satellite system		Indicates that the satellite system is activated and the receiver **is** tracking satellites. The number of currently tracked satellites is shown.
		Indicates that the satellite system is activated but the receiver is **not** tracking satellites.
		Indicates that the satellite system is not activated.

Oscillator		**Internal** - this receiver is configured to use the internal receive clock (default setting). **TCXO, OCXO, Rubidium, Cesium** - The receiver is configured to use the listed external oscillator. If an external oscillator is configured connected, the receiver will not be able to track any satellites.
		An external oscillator is configured with the oscillator fallback option active. No time signal was detected for more than 5 minutes or the antenna was disconnected for more than 5 minutes. The receiver is now using the internal clock instead of the selected external oscillator. This is a single fallback after 5 minutes without automatic return to external oscillator
		No time signal is available from the configured external oscillator. If no position is available either, no time signal is available to the receiver. If a position is available, the receiver has not received a time signal from the external oscillator for more than 5min and an automatic fallback to the internal oscillator has occurred. Please see GNSS management: Tracking for more information on the automatic fallback to internal oscillator.

Status: Event log

The Event log box shows the latest eight messages from the Status / Event log page. The Event log box is updated every 5 seconds.

Icon	Description
	Information message. **User action:** No action is required from the user.
	Receiver message. **User action:** A change in the receiver operation has occurred. Check that this was an intended change.
	Warning message. **User action:** Receiver warning message, an action is required from the user.

Hints

On each Web interface page that allows configuration changes, the shown input fields are described in hints. Hints provide a quick context based help system. For more information consult the online help available via the **Show help** button .

For better clarity, the hints are hidden per default. Press the **Hints** button to display the information. After pressing the button, a blue box appears underneath each field to explain the setting.

FTP server port	21 The TCP/IP server port of the FTP server (commonly used is 21).

Press the **Hints** button again to hide the hints.

Pop-up boxes

Pop-up boxes provide quick access to additional status information that per default is hidden for better clarity. A pop-up box opens when the user clicks on underlined text in the web interface.

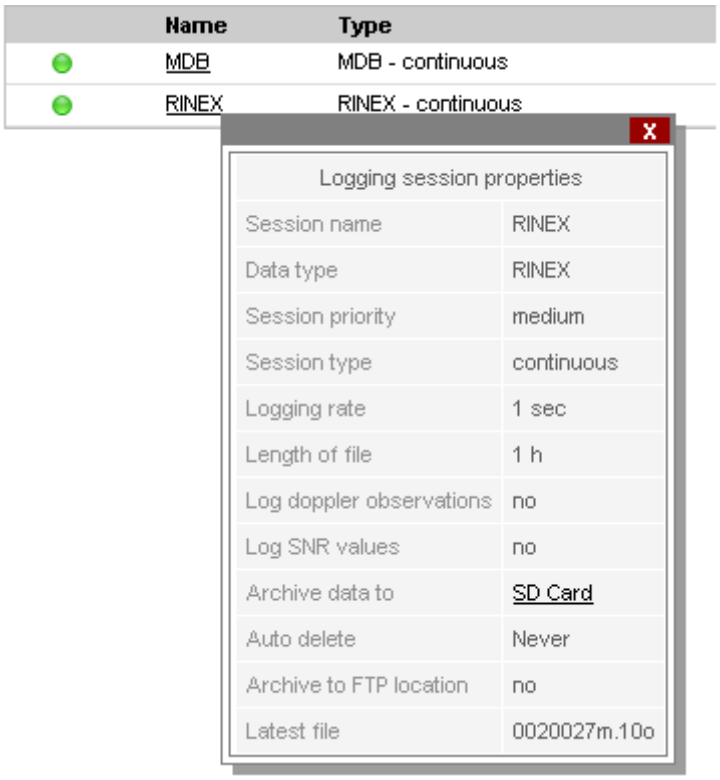

The underlined SD Card token in the Logging session properties pop-up box opens an FTP access to the receivers SD card.

A pop-up box is also opened when clicking on the number of tracked satellites in the Tracking status block.

Press the X button in the upper right corner to close the pop-up box.

Tool tips

In the Web interface, tool tips are used to explain the functionality of icons and buttons. Move the mouse over an icon to show the tool tip.

Move the mouse away from the icon and the tool tip disappears.

Related topics

LED Indicators on GR10/30 & GM10/30
LED Indicators on GR25/50

5: Getting started

Operation: Overview

Menu option	Description
Network technology and protocol overview	An explanation of some of the networking technologies and protocols which are used by the receiver.
Equipment Setup	A step-by-step overview of the required equipment and cables to set up the receiver. • Basic setup • Setup via Web interface over Ethernet and DHCP • Setup in a non - DHCP network • Install USB drivers • Setup via Web interface over USB
Working with the Memory Device	Important safety directions for using the SD card and a step-by-step guide on how to insert and remove an SD card.

Step-by-step guides

- Use DHCP to automatically assign a hostname and all network parameters to a GR/GM receiver
- Use DynDNS to assign a hostname to a GR/GM receiver with a static IP
- Access the web interface for the first time and change the default user
- Activate Leica support access step-by-step
- Configure coordinates and site name step-by-step
- Configure tracking settings step-by-step
- Configure a RINEX logging session step-by-step
- Configure a data stream step-by-step

A detailed description of every Web interface page is included in the Context sensitive help section.

Network technology and protocol overview

This section explains some of the networking technologies and protocols which are used by the receiver.

DNS

DNS stands for “Domain Name System”. This protocol allows the usage of a hostname rather than only using the IP address to register and access a network device within a computer network. However, the IP address can still be used to access the network device.

A DNS server is needed within a network in order to use the preconfigured hostname of a GR/GM receiver.

DHCP

DHCP is short for **Dynamic Host Configuration Protocol**. This protocol allows a dynamic assignment of network configuration parameters of a new network device which is added to a computer network. If a DHCP enabled network device is connected to a LAN it can query the DHCP server to assign valid values for IP address, default gateway, subnet mask and other parameters which are needed to be properly registered within the network. DHCP reduces system administration workload, allowing devices to be added to the network with little or no manual intervention.

As a result, directly after connecting it the network device can be accessed straightaway by a preconfigured hostname. The hostname is GRxxxxxxx or GMxxxxxxx, with “xxxxxxx” being the serial number of the receiver.

Dynamic vs. static IP address

Network devices may have a permanent, so called “static”, IP address or they may have a changing so called “dynamic” IP address. Usually static IP addresses are more expensive than dynamic addresses. If only a dynamic address is available then DHCP should be used in order to always have the same hostname of the respective network device. When using a dynamic IP without assigning a hostname, the IP of the receiver will frequently change. This means that the connection settings to connect to the receiver would have to be updated each time the IP address has changed (e.g. once per day).
When DHCP and DNS servers are available within a LAN the same hostname can be used for a network device even when the IP address changes.

Related topics

Use DNS and DHCP to automatically assign a hostname and all network parameters to a receiver

Use DNS to assign a hostname to a receiver with static IP

Equipment Setup

Basic setup step-by-step

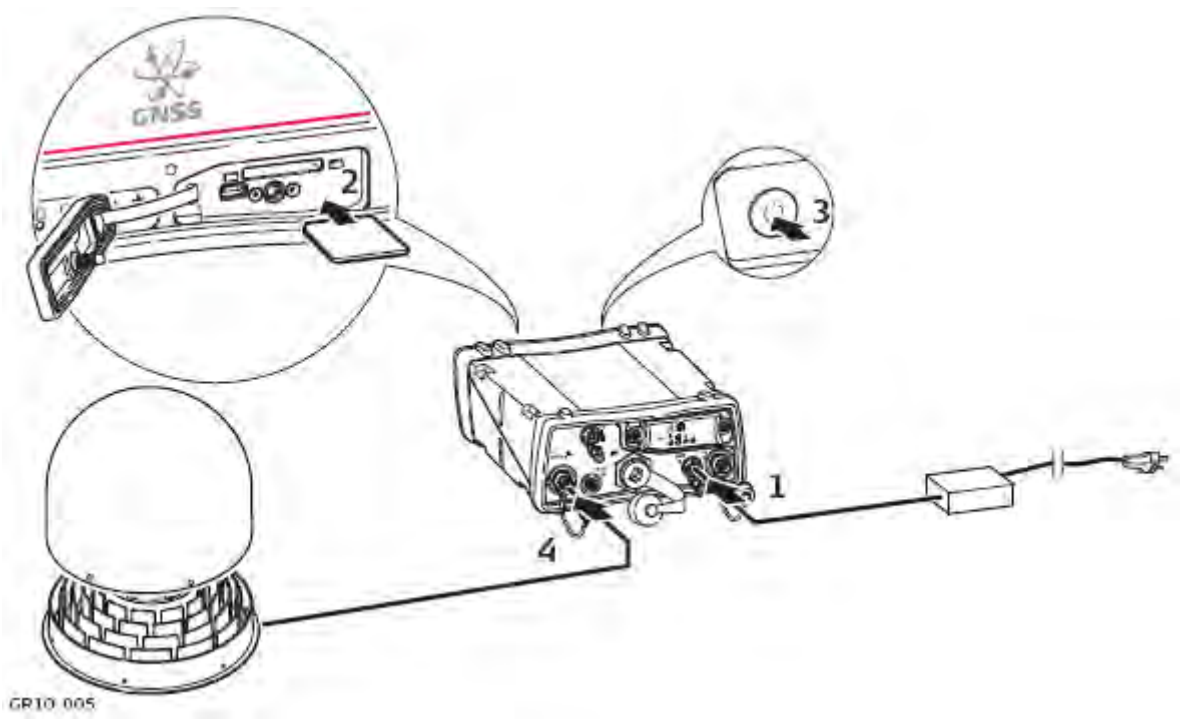

Step	Description
1	Find the power port (PWR) at the back of the receiver. Plug in the power cable/GEV238 power supply.
2	Insert the SD card into the SD card slot. For more information on how to work with the SD card, refer to Working with the Memory Device.
3	Turn the receiver on.
4	Attach the antenna cable, for example the GEV194, 1.8 m antenna cable, to the receiver's antenna port and

	to the connector on the antenna.
	To access the receiver via Ethernet, USB, Bluetooth or WLAN, refer to: • Setup via Web Interface over Ethernet and DHCP • Setup in a non-DHCP network • Install USB drivers • Setup via Web Interface over USB • Setup via Web Interface over Bluetooth (GR25) • Setup via Web Interface over WLAN (GR25)

Setup via Web Interface over Ethernet and DHCP

Setup via Web Interface over Ethernet and DHCP

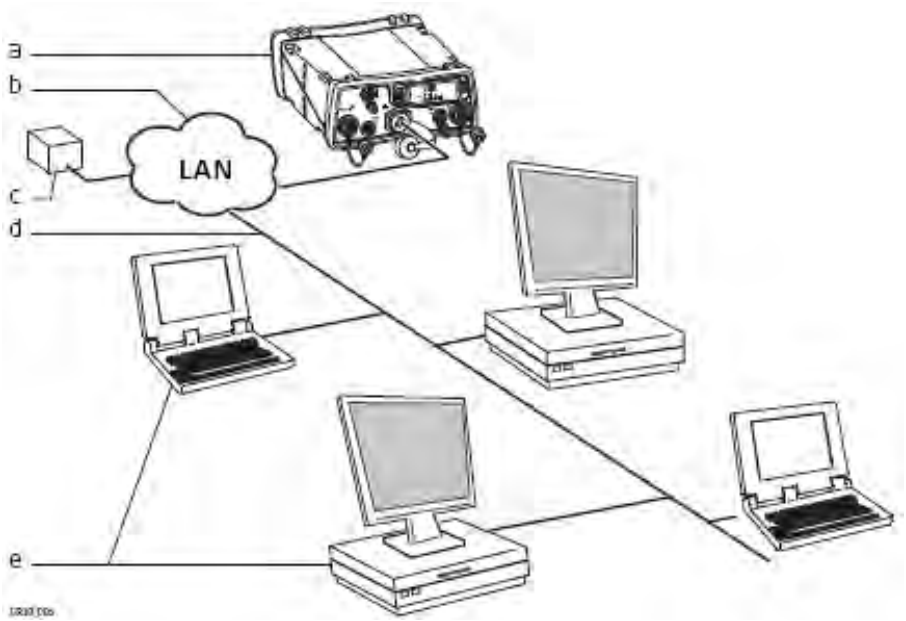

a. GR/GM receiver
b. Local network (LAN)
c. DHCP server
d. Ethernet cable
e. Computers with Web interface

Step	Description
1	Start the computer.
2	To connect the instrument to the local LAN supporting DHCP, plug an Ethernet cable with a RJ45 connector into the RJ45 Ethernet port on the back of the instrument.
3	Connect the other end of the cable with a network device of your LAN, e.g. hub, switch or router.
4	Turn the receiver on.
5	Open a browser window on your computer.
6	Type "**GR*******"** or "**GM********* into the browsers address field, with ******* being the serial number of the receiver. For example, GR1700001 or GM1700001.
7	The Web interface will now be available. Configure the instrument for all required settings.

Setup in a non-DHCP Network

Setup in a non-DHCP network

If the instrument is setup in a non-DHCP network, the web interface can still be accessed using a crossed Ethernet cable.

Step	Description
1	Start the computer.
2	Connect the crossed Ethernet cable to the computer and the Ethernet port on the back of the receiver.
3	Turn the receiver on.
4	On the computer go **Start / Control Panel / Network Connections**.

5	Select the Network connection used with the crossed Ethernet cable, right click and select Properties. 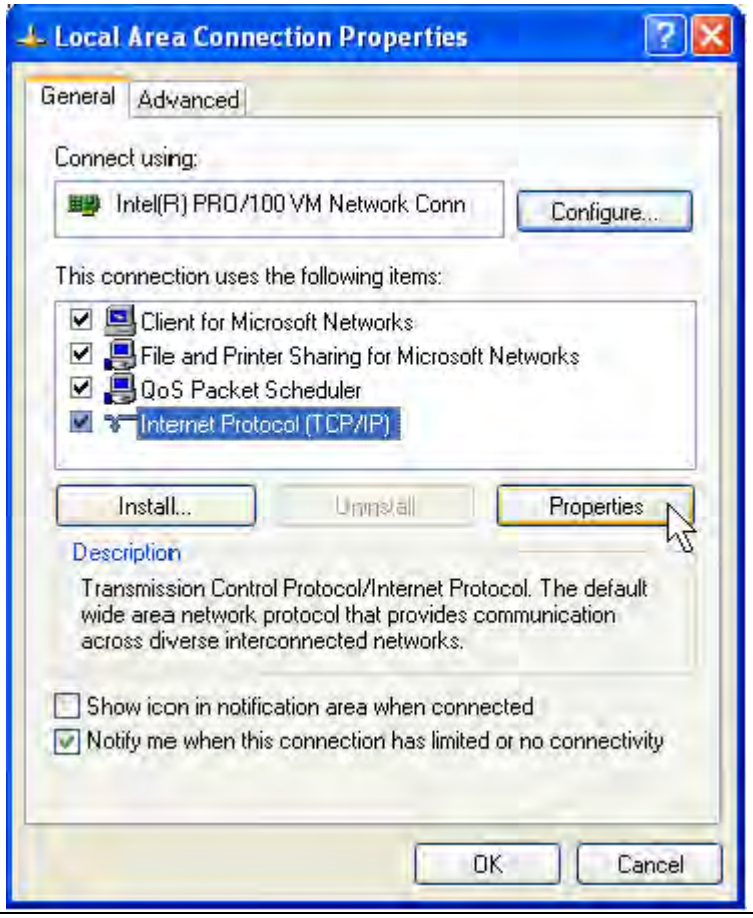
6	In the General tab, highlight Internet Protocol and press **Properties**.
7	Select **Use the following IP address** and enter, • **IP address:** 192.168.0.1 • **Subnet mask:** 255.255.255.0

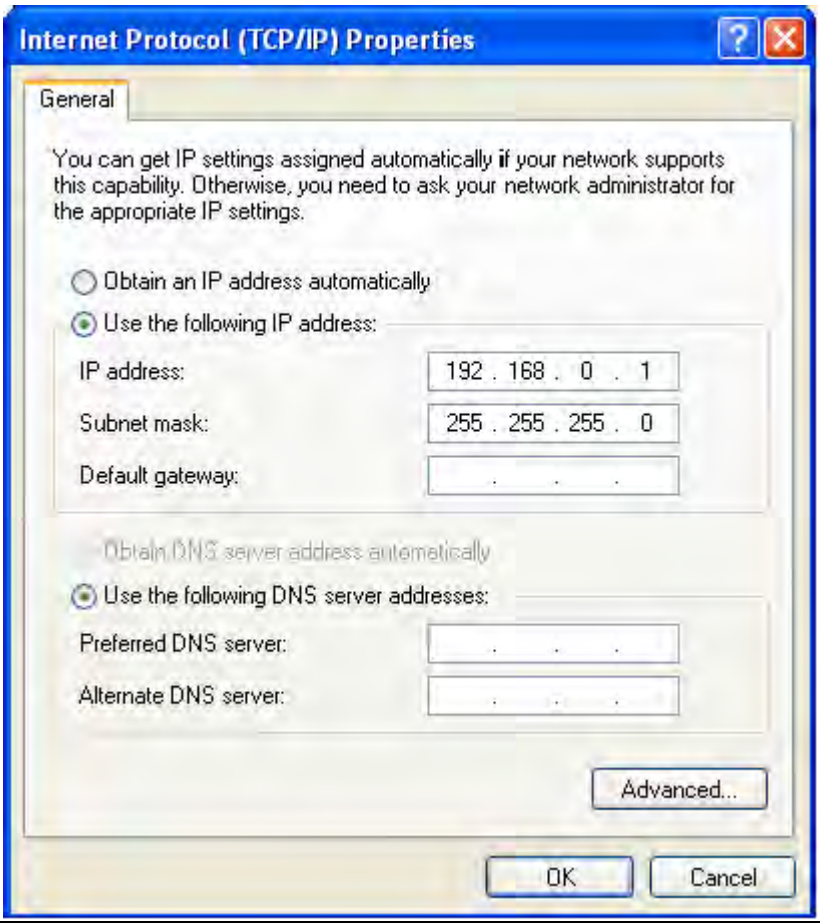

8	Press OK.
9	Open a browser window and enter **192.168.0.3** to open the Web interface.
☞	Per default, the instrument is configured to obtain an IP address automatically from a DHCP network. To use the default static IP address **192.168.0.3**, reboot the instrument once it is connected to the crossed Ethernet cable.

GR25/50 setup in a non-DHCP network using screen and buttons

In a field campaign the GR25/50 can be configured through the screen and buttons, to start or stop pre-configured data streams and logging sessions.

For initial setup, the GR25/50 IT configuration for setup in a non-DHCP network can be done through the screen and buttons.

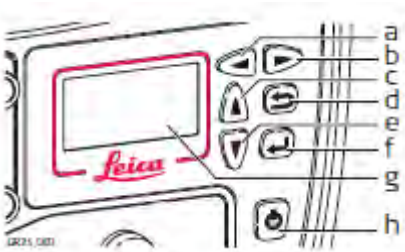

a. Left button
b. Right button
c. Up button
d. Cancel button
e. Down button
f. Enter button
g. Screen
h. ON/OFF button

Step	Description
1	Turn on the GR25/50.
2	Use the arrow buttons go to **Configuration**, **Network Config**.
3	To use a custom static IP address, **disable DHCP**, then enter the IP address, Subnet mask and gateway. Press **Enter** to store each setting.

	OR To use the default static IP address, leave **DHCP enabled**. Once the ethernet cable is connected to a non-DHCP network, the receiver will fall back to the settings: • IP address 192.168.0.3 • Gateway 255.255.255.0 Configure your PC accordingly to access the receiver (e.g. via crossed ethernet cable). **OR** To use a previously configured static IP address, **disable DHCP**. The receiver will fall back to the last used static IP address. If no static IP address had previously been configured, the receiver will use the default settings: • IP address 192.168.0.3 • Gateway 255.255.255.0

Install USB drivers

Install USB drivers

Before connecting the GR/GM receiver to a computer using a USB cable, you must first install USB drivers. To install the USB drivers refer to:

- Install USB drivers for Windows 7 operating systems

Only one instrument can be connected to the computer via USB at a time.

Install USB drivers for Windows 7 operating systems

Follow these steps to install drivers for Windows 7 operating systems for the first time:

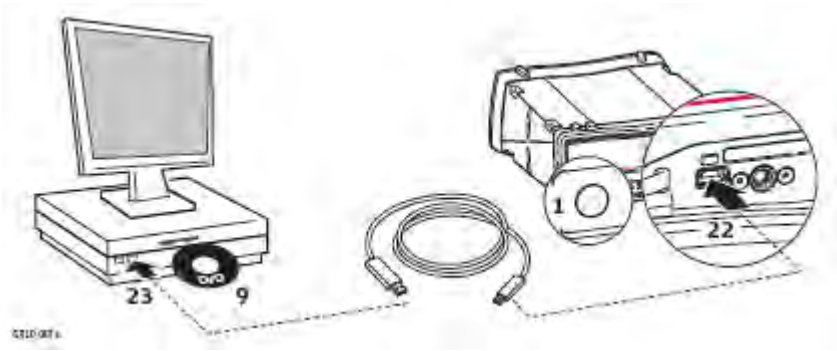

Step	Description
1	Turn on the receiver.
2	Start the computer.
3	Disable the User Account Control before installing the drivers.
4	Go to **Start** / **Control Panel** / **User Accounts and Family Safety** (or **User Accounts**, if you are connected to a network domain) / **User Accounts**.
5	Go to **Change User Account Control** settings.
6	Select level **Never notify** and click **OK**.

7	Confirm the change by clicking on **Yes** when asked to allow the change.
8	Restart the computer for all changes to take effect. (Not needed if UAC is already disabled.)
9	Insert the Leica digital storage device.
10	Run the installer executable depending on your CPU and operating system to install the drivers necessary for your GR/GM receiver. • 32 bit CPU: SetupViva&GR_USB_32bit.exe • 64 bit CPU: SetupViva&GR_USB_64bit.exe • Itanium 64 bit CPU: SetupViva&GR_USB_64bit_itanium.exe
11	Wait until the Mobile Device Center Driver Update is finished.
12	The **Welcome to the InstallShield Wizard** for Leica Viva & GR/GM USB drivers window appears.
13	Click **Next>**.
14	The **Ready to Install the Program** window appears.
15	Click Install. The drivers will be installed on your computer.
16	Click **Continue Anyway** every time a window pops up saying that the software has not passed the Windows Logo testing.
17	The **InstallShield Wizard Completed** window appears.
18	Read the instructions and check the box, **I have read the instructions**. These instructions are listed in detail in the following steps.
19	Click Finish to exit the wizard.
20	Loosen the screw on the SD card/USB port cover.
21	Open the SD card/USB port cover.
22	Plug the USB cable into the USB port on the instrument.
23	Plug the USB cable into the USB port of the computer.
☞	Windows will show searching for IP address. Ignore this and go to the next step.
24	Run shortcut **Configure GR/GM connection** which has been created on the Windows desktop.
☞	There are two more shortcuts created for the GS and CS. These shortcuts can be ignored, unless these devices will be used on this computer. Refer to the GS/CS User Manual for further information.
25	A DOS window is opened and a batch file is started to configure the IP settings for the RNDIS network adapter.
26	Press any key to close the DOS window.
27	Disconnect and reconnect the USB cable.
28	Open a browser and type in the IP address: 192.168.254.2 to access the Web interface.
29	Configure the instrument for all required settings.
30	Use the default **User name** (Admin) and **Password** (12345678).
☞	After logging in the first time you must create a new user account, including a new user name and password. The default user account can then be deleted. Go to Access the web interface for the first time and change the default user for a step-by-step guide.
☞	Please make sure that JavaScript is allowed to be executed. Check the browser settings if you should have problems using the web interface.

Troubleshooting

Troubleshooting: Installing USB drivers

Setup via Web Interface over USB

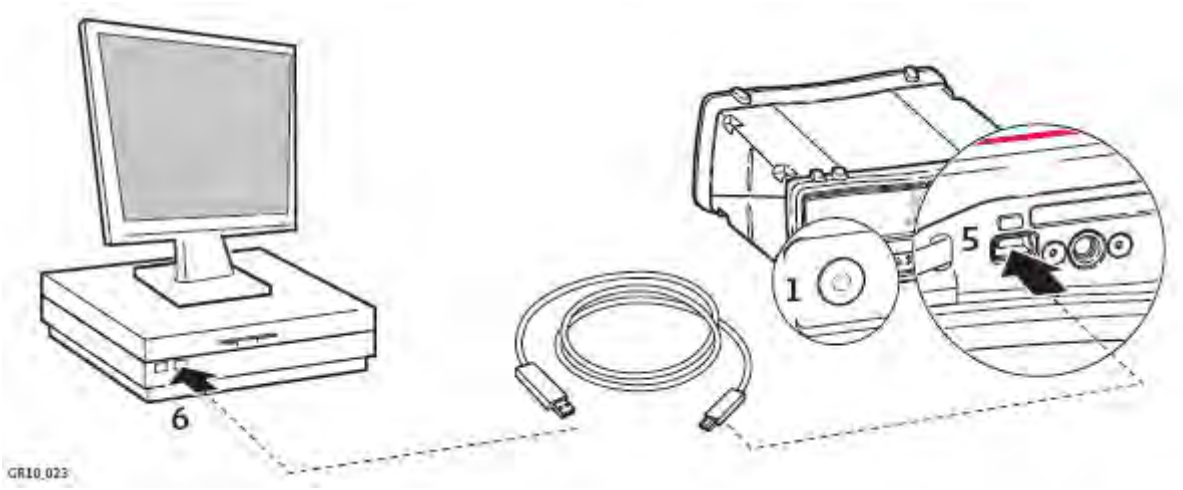

Step	Description
1	Turn on the instrument.
2	Start the computer.
3	Loosen the screw on the SD card/USB port cover.
4	Open the SD card/USB port cover.
5	Plug the USB cable into the USB port on the instrument.
6	Plug the USB cable into the USB port of the computer.
7	Open a browser and type in the IP address: 192.168.254.2 to access the Web interface.
8	Use the default **User name** (Admin) and **Password** (12345678).
☞	After logging in the first time you must create a new user account, including a new user name and password. The default user account can then be deleted. Go to Access the web interface for the first time and change the default user for a step-by-step guide.
9	Configure the instrument for all required settings.

Related topics

Setup via Web Interface over USB, for the first time

Setup via Web Interface over Ethernet and DHCP

Troubleshooting: Installing USB drivers

The Web interface is not available

1. Have you followed the steps outlined in Setup via Web Interface over USB, for the first time ?
2. If the web interface is not available it might be necessary to manually assign an IP address to the virtual network adapter. To do so please follow the steps below:

Windows 7

Step	Description
1	Go to **Start** / **Control Panel** / **Network and Sharing Center / Change adapter settings**.
2	Find the network connection using the **Remote NDIS based LGS GR Device**.
3	Right click and select **Status**.
4	Click on **Properties**.
5	Select the item, **Internet Protocol Version 4 (TCP/IPv4)** and click on **Properties**.
6	Pick option **Use the following IP address** and choose an address in the range of 192.168.254.1 … 192.168.254.255 - except 192.168.254.2 which is the IP of the GR/GM receiver. Use subnet mask 255.255.255.0.
7	Close all dialogs with **OK** or **Close**. Disconnect and reconnect the USB cable.

Setup via Web Interface over Bluetooth or WLAN (GR25/50)

Setup via Web Interface over Bluetooth (GR25/50)

☞ Only available for GR25/50 with bluetooth radio installed.

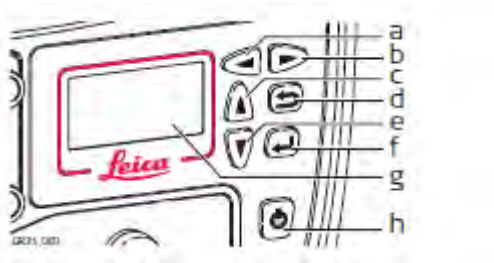

a. Left button
b. Right button
c. Up button
d. Cancel button
e. Down button
f. Enter button
g. Screen
h. ON/OFF button

Step	Description
1	Turn on the receiver.
2	Use the arrow buttons, go to **Configuration, Network Config**. Scroll down to the Bluetooth field and use the left button to enable Bluetooth.
3	Activate bluetooth on your computer and search for Bluetooth devices. The instruments hostname will be listed.
4	Pair the Bluetooth connection of your computer with the instrument. The default pairing code is 0000. The pairing code can be changed later in the web interface.
5	Once the pairing is finished, right click on the GR25/50 device listed in your Bluetooth devices panel and select **Connect**.
6	Go to the **Network connections** panel of your computer and select the Bluetooth network connection connected to the receiver. Right click and open the properties.
7	Highlight the T**CP/IP connection** and click on the **Properties** button.
8	Enter the IP address **192.168.253.x** and subnet mask **255.255.255.0**.
9	Open a browser and type in the IP address: 192.168.253.2 to access the Web interface.
10	Use the default **User name** (Admin) and **Password** (12345678).
☞	After logging in the first time you must create a new user account, including a new user name and password. The default user account can then be deleted. Refer to the GR/GM Operational Manual (Online Help) for a step-by-step guide.
11	Configure the instrument for all required settings.

Setup via Web interface over WLAN (GR25/50)

☞ Only available for GR25/50 with WLAN radio installed.

☞ Please note that this page describes a wireless ad-hoc connection to the default profile. For user defined ad-hoc setups, please edit the described settings accordingly.

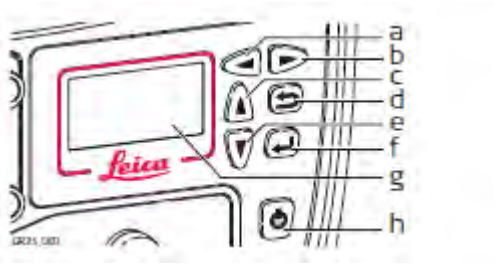

a. Left button
b. Right button
c. Up button
d. Cancel button
e. Down button
f. Enter button
g. Screen
h. ON/OFF button

Step	Description
1	Turn on the receiver.
2	Use the arrow buttons, go to **Configuration / Network Config / WLAN** and use the left button to enable the WLAN radio. ☞ A WLAN default profile is pre-configured on all GR25/50 with the WLAN hardware installed and the GRL120 WLAN option installed.
3	Activate WLAN on your computer. It may be necessary to use a hardware or software switch.
4	On your computer, go to Start > Control panel > Network and Sharing Center.
5	Select to set up a new network.
6	Create a new wireless ad hoc (computer-to-computer) network.
7	Choose the security type to be “No authentication (Open)” and leave the security key field blank. Enter the receiver's serial number for the network name.
8	Edit the network settings of your computers WLAN adapter: IP address: 192.168.252.x

	where “x” is a value between 1 and 255 (but not 2 as this is the IP address of the default WLAN profile of the GR25/50) Subnet mask: 255.255.255.0.
9	In the Control Panel, open the Windows Mobility Center and right click the new wireless network. Choose "Connect" in the context menu.
10	Open a browser and type in the IP address: 192.168.252.2 to access the Web interface.
11	Use the default **User name** (Admin) and **Password** (12345678).
☞	After logging in the first time you must create a new user account, including a new user name and password. The default user account can then be deleted. Refer to the GR/GM Operational Manual (Online Help) for a step-by-step guide.
11	Configure the instrument for all required settings.

Operation

Batteries

Batteries Operating Principles

Charging / first-time use

- The battery must be charged prior to using it for the first time because it is delivered with an energy content as low as possible.
- The permissible temperature range for charging is between 0°C to +40°C/+32°F to +104°F. For optimal charging, we recommend charging the batteries at a low ambient temperature of +10°C to +20°C/+50°F to +68°F if possible.
- It is normal for the battery to become warm during charging. Using the chargers recommended by Leica Geosystems, it is not possible to charge the battery if the temperature is too high.
- For new batteries or batteries that have been stored for a long time (>three months), it is effectual to make only one charge/discharge cycle.
- For Li-Ion batteries, a single discharging and charging cycle is sufficient. We recommend carrying out the process when the battery capacity indicated on the charger or on a Leica Geosystems product deviates significantly from the actual battery capacity available.
- The battery will be charged when the battery voltage is 1V or more below the voltage of the external power supply. If during charging the voltage level of the battery rises to less than 1V below the voltage of the external power supply, charging will stop.

We recommend external power supplies that provide a voltage of 18V or higher should be used when charging of the battery is needed.

Operation / Discharging

- The batteries can be operated from -20°C to +55°C/-4°F to +131°F.
- Low operating temperatures reduce the capacity that can be drawn; high operating temperatures reduce the service life of the battery.

Charging the GR25/50 battery

Insert and remove the battery on the GR25/50 step-by-step

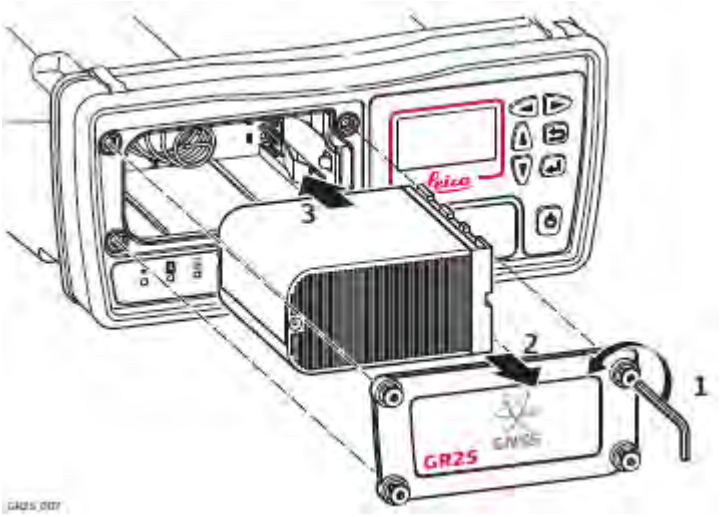

Step	Description
☞	The battery is inserted in the front of the instrument.
1	Loosen the screws on the battery compartment with the Allen key provided with the GR25/50.
2	Remove the battery cover.
3	With the arrow facing forward, slide the battery into the battery compartment and push so that it locks into position.
4	Replace the cover of the battery compartment and tighten the screws.
5	To remove the battery, loosen the screws and remove the cover of the battery compartment.
6	Push the ledge on the right side of the battery compartment to the right until it releases the battery.
7	Pull out the battery.
8	Replace the cover of the battery compartment and tighten the screws.

Using the GR25/50 Internal Battery and Charger

Charging

- Battery charging can be enabled in the GR25/50 Web Interface. Go to Receiver setup / Power management.
  Note: When charging the GEB241 battery with the internal charger, it is technically possible to charge the GEB241 battery between 0°C to +65°C/ +32°F to +149°F. Please note the internal temperature reading on the GR25/50 web interface
- When the receiver is turned on, the battery charging status is indicated in the GR25/50 Web Interface.
- When the receiver is powered down, battery charging is indicated via the LEDs. For further information refer to LED Indicators on the GR25/50.

Working with the Memory Device

Working with the Memory Device

☞

- Keep the card dry.
- Use it only within the specified temperature range.
- Do not bend the card.
- Protect the card from direct impacts.

- The SD card must not be removed while the instrument is writing data to the card. To remove the SD card safely, turn off the instrument beforehand.
- Ensure that the instrument is off before inserting the SD card. Switching on the instrument will ensure the necessary folder structure is available on the SD card.

Failure to follow these instructions could result in data loss and/or permanent damage to the card.

Related topics

Insert and remove an SD card into instrument step-by-step
Directory structure of the memory device

Insert and remove an SD card into the instrument step-by-step

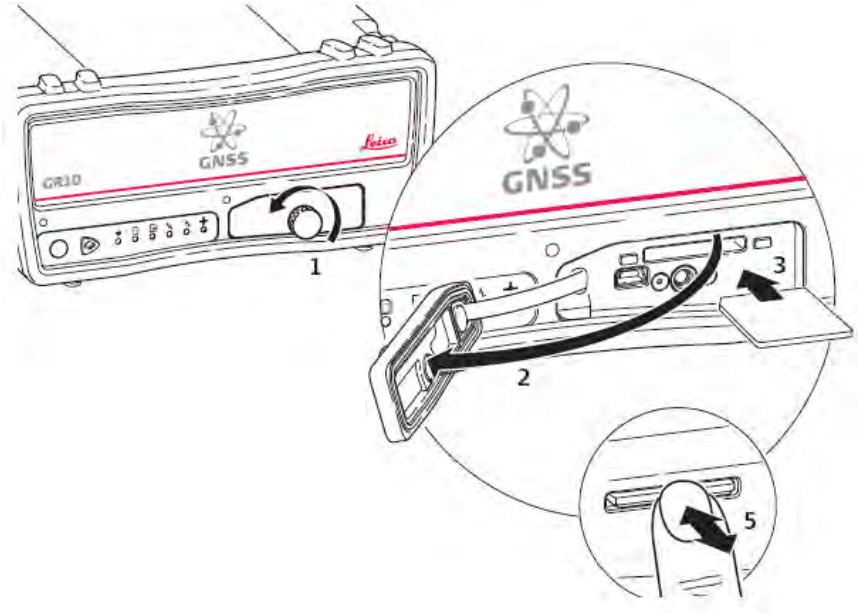

Step	Description
	The SD card is inserted into a slot inside the SD card/USB port cover on the front of the instrument.
1	Loosen the screw on the SD card/USB port cover.
2	Open the SD card/USB port cover.
3	Place the SD card into the slot. The card should be held with the contacts downwards and facing the slot. Do not touch the contacts.
4	Slide the card firmly into the slot until it clicks into position.
5	To remove the SD card, gently press inwards on the card to release it from the slot.
6	Place the SD card/USB port cover back over the slot and tighten the cover screw.

Related topics

Directory structure of the memory device

Use DHCP to automatically assign an IP address and all network parameters to a GR/GM receiver

This procedure requires DHCP and DNS servers within the network the GR/GM receiver is connected to. As a result all network parameters will be assigned automatically. No IP address, subnet mask, gateway or DNS server IP address has to be assigned manually. The assigned hostname can be used to access the receiver within the network. By default the hostname on the GR/GM receiver is GRxxxxxxx or GMxxxxxxx, with “xxxxxxx” being the serial number of the GR/GM receiver.

Step	Description
1	Enter the web interface using an Administrator user account.
2	Go to **Receiver Setup / Network Connections**.
3	On the General tab enter a receiver hostname.
4	Tick the check box **Obtain an IP address automatically**.
5	Click on **Save changes** to save all settings.
☞	These are the default settings. When you first access the receiver's web interface in a DHCP network, the hostname can be used as described above without editing any settings. If the settings have been edited, formatting the receiver settings will also bring back the described configuration.

Use a hostname to access an instrument with a static IP address

This procedure requires a **DNS** server in the network that the GR/GM receiver is connected to. As a result the assigned hostname can be used to access the receiver within the network. If no **DHCP** server is available all network parameters have to be entered manually. Please contact your network administrator to get valid parameters.

If no **DHCP** is available in the network the instrument is connected to, a static IP address must be used. This IP address can then be associated with a hostname using a DNS server. The hostname can be manually configured on the instrument. By default the hostname on the GR/GM receiver is GRxxxxxxx or GMxxxxxxx, with “xxxxxxx” being the serial number of the GR/GM receiver.

Step	Description
1	Enter the web interface using an Administrator user account.
2	Go to **Receiver Setup / Network Connections**.
3	On the General tab enter a receiver hostname.
4	Do not tick the check box **Obtain an IP address automatically**.
5	Enter valid values for IP address, subnet mask and default gateway.
6	Enter valid values for preferred and alternate DynDNS servers.
7	Click on **Save changes** to save all settings.

Access the web interface for the first time and change the default user

This section explains using which user account the web interface can be accessed for the first time, how a new user account is created and how the default user account is deleted.

Step	Description
1	When accessing the web interface for the first time the default administrator user account must be used.
2	On the Log in page use user name **Admin** and password **12345678**.
3	Then go to page **Receiver Setup / Access Management**.
4	Use the **Create new user** button.
5	Type in a user name and password, confirm the password.
6	In the list box **Web interface user level** select **Administrator**.
7	In list box **FTP server access** choose **Read / Write**.
8	Use the **Save changes** button to save all settings.
9	If the password meets the password requirements the new user account will be saved and thus be shown in the list of configured users.
10	To avoid unauthorized access it is recommended to delete the default user.
11	For this, log out from the web interface and log in now using the new user account.
12	Go to **Receiver Setup / Access Management** and use the **Delete** button to delete the default **Admin** user account.
13	Confirm the deletion by clicking on the **OK** button. After this, the default user **Admin** will have been deleted.

Activate Leica support access step-by-step

This section explains how Leica Support can be allowed to access the web interface.

Step	Description
1	Enter the web interface using a user account having Administrator rights.
2	Go to **Support / Properties**.
3	Activate check box **Enable Leica support**.
4	Save the settings using the **Save changes** button. Type topic text here.

Configure coordinates and site name step-by-step

This section explains how to configure site coordinates and site name

Step	Description
1	Access the web interface.
2	Go to page **GNSS management / Site name and coordinates**.
3	Enter values in the text field **Site code**. This four character ID will be used as identifier for the instrument and will be used for the name of logged files (first four characters of the file name).
4	Entering values in fields **Site name**, **Marker name** and **Marker number** is optional as this information is only used as header information when creating RINEX files.
5	In the second section of the page you can enter the reference coordinates of your site. Either geodetic or Cartesian coordinates can be entered.
6	The time zone can be set to have all receiver activities aligned to a specific time zone. As a result all event messages will refer to the chosen time zone. Also the logged files will have creation time stamps referring to the chosen time zone.
7	Press the **Save changes** button to save all settings.

Configure tracking settings step-by-step

This section explains how to configure the tracking settings.

Step	Description
1	Access the web interface.
2	Go to page **GNSS management / Tracking**.
3	On the **General** tab the basic tracking options can be configured.
4	Select the satellite systems you want to track using the check boxes.
5	In the row **Satellite signals** specific signals of a satellite system can be chosen, e.g. the L2P tracking settings for GPS.
6	Select an elevation cut off angle depending on your site.
7	Select smoothed or unsmoothed code observations using the list box.
8	Enable check box **Message on loss of lock** if you want to get an event message in case a loss of lock happens.
9	In row **Oscillator** leave the default option “Internal” when no external oscillator is connected. If an external oscillator should be used select its type and choose the frequency of the time signal.
10	Press the **Save changes** button to save all settings.
11	For each active satellite system there is an additional tab which allows to manually set individual satellites to healthy or unhealthy. Please refer to the Content sensitive help topic, GNSS management: Tracking General for more information on this topic.

Configure a RINEX logging session step-by-step

This section explains how to configure a continuous RINEX logging session.

Step	Description
1	Access the web interface.
2	Go to page **GNSS management / Logging sessions**.
3	Use the button Create a new logging session .
4	The logging session wizard will start.
5	On the first page of the wizard enter a session name and choose **RINEX 2.11 or RINEX 3.01**in the list box **Data type**. Select a session priority and choose **continuous** in list box **Session type**. Then use the **Continue** button.
6	On the next page choose a logging rate, the length of the logged file, the dynamics of the session and

	activate the check box if Doppler observations should be logged. Then use the **Continue** button.
7	On the following page you can choose if the logged files should be zipped, you can select a directory naming convention, choose an FTP location where the files should be sent to and set an interval after which the files should be deleted from the memory device.
	Note that you have to set up an FTP location on page **GNSS management / FTP location** before you can choose it in the respective list box.T hen use the **Continue** button.
8	On the last page of the wizard you can activate the logging session. In this case the logging will immediately start. If you do not activate the check box **Activate session** the session will be saved with all its settings but it will not be started. Press the **Save changes** button to save all settings.

Configure a data stream step-by-step

This section explains how to configure a new outgoing real time data stream using a radio.

Step	Description
1	Access the web interface.
2	Go to page **GNSS management / Data streams**.
3	Use the button **Create a new data stream** .
4	The outgoing data stream wizard will start.
5	Select **Real time** in list box **Data stream type**. Press **Continue** .
6	On the next page select a message format, version and message types (if available). Here you can also configure a reference station ID, the end of message settings, enable time slicing and choose the message rates. When finished press the **Continue** button.
7	On the following page you can choose the type of data transmission, e.g. TCP/IP, modem or radio. Select **Radio** and press **Continue** **.**
8	The next page allows selecting a specific radio from the list of configured radio devices. Besides this, the radio channel can defined. When finished press the **Continue** button.
9	On the last page of the wizard you can activate the stream or just save the settings without staring the new stream. Press the **Save changes** button to save all settings.

After installing the dual frequency option, the configured data streams must be restarted to enable both L1 and L2 streams.

6: Context sensitive help

Context sensitive help: Overview

View detailed context sensitive help for every page in the web interface.

Chapter	Description
Status	View the status of important receiver information, such as the configured logging sessions, the satellite tracking, an overview of the ports in use and the power and memory available.
GNSS Management	Configure all GNSS data related settings, such as logging sessions, data streams and the tracking settings. Or enter site specific information such as the site name, position and antenna details.
Receiver setup	Configure all receiver related settings such as network connections, FTP push locations and the user management. Or use the tools to upgrade the receiver firmware, add new option keys or switch to your preferred language.
Support	The Support menu options allow you to send the settings of your receiver and debug information to Leica NRS support in order to help solve receiver problems.

Status

Status: Overview

View the status of important receiver information, such as the configured logging sessions, the satellite tracking, an overview of the ports in use and the power and memory available.

Menu option	Description
Receiver information	View detailed information about the receiver, including the installed firmware version, maintenance date and options.
Position	Shows the currently calculated position (Navigated, DGPS or Fixed), the user entered reference position, the position calculation rate, the displacements compared to the reference position, the position quality and the DOP values.
Tracking	The general page provides an overview of the received almanac for each satellite system and the health information for all satellites. Each satellite system tab shows the satellites tracked on each frequency and their current status information such as elevation, azimuth, SNR values and health. Available tabs: • General • GPS • GLONASS • GALILEO • SBAS
Data streams	Displays a list of all configured outgoing data streams and all incoming data streams from attached devices (meteo and tilt devices).
Logging sessions	View detailed information about the configured logging sessions.
Ntrip caster	Shows the status of the Ntrip caster (active / inactive), the port it is running on, and lists all the mount points running on the Ntrip caster.
Port summary	Shows all configured open ports, their connections status and the data stream used for this port.
Event log	View and filter the history of messages regarding the receiver status.
Network connections	Lists all active TCP/IP network connections on the receiver and their status.
System resources	Shows the status of the connected power supply and the used/free space on the inserted SD card.

To enable or disable the automatic update of the status page, please go to Receiver setup: Web server and activate or deactivate the **Automatic status page reload**.

Status: Receiver information

Status: Receiver information - Receiver

Background information

Provides an overview of receiver specific information such as serial number, installed firmware version and installed options.

Field description

The table below describes the fields in the Status: Receiver information / Receiver tab.

Press the **Refresh icon** to update the displayed data.

Instrument details	Description
Instrument type	The receiver type.
Serial number	Serial number of the receiver.
Site code	Four digit identifier for the receiver. This is also used as the first four characters of the raw data (MDB) and RINEX file name created on the receiver.
System language	The language loaded on the receiver.
ME serial number	The serial number of the measurement engine.
ME Hardware	The hardware revision of the measurement engine.

The default functionality section lists the options that are installed by default on each GR/GM receiver.

Default functionality	Description
Ethernet	Ethernet connection is available on every GR/GM receiver.
GNSS Spider OWI	The Leica GNSS Spider software can connect and control any GR/GM receiver by default. No additional option is needed.

Loaded firmware	Description
Maintenance end	The expiry date of the software maintenance contract. For information on Custom Care Packages visit the Leica Geosystems web page or contact your local Leica Geosystems representative.
Firmware	The firmware version (build number) loaded on the receiver. If a new firmware version is available, all GR/GM receivers connected to the Internet will show the message, **A new firmware version is available on the Leica website.** Receivers with automatic firmware upload and installation active, will install the new firmware when it is available. Go to Receiver setup / Tools, Firmware tab to download the new firmware file.
ME Firmware	The firmware version of the measurement engine.
ME Boot	The firmware version of the boot software for the Measurement Engine.
Navigation software	The navigation firmware version with the algorithms for signal processing.
LB2 / OWI	The version number of the LB2/OWI commands.
Operating system	The firmware version of the Windows CE operating system.
EFI loader	The firmware version of the Electronic Front Interface loader.
EFI	The firmware version of the Electronic Front Interface.
XLDR	The firmware version of the XLDR loader component of the operating system.
EBoot	The version of the Eboot loader component of the operating system.
CHAIN	The version of the CHAIN loader component of the operating system.

To enable or disable the automatic update of the status page, please go to Receiver setup: Web server and activate or deactivate the **Automatic status page reload**.

Related topics

Status: Overview
Status: Receiver information - Options

GNSS management
Receiver setup

Status: Receiver information - Options

Background information

The receiver options tab lists all the options available for this receiver and which of these options are already installed.

- To install new options go to Receiver setup / Tools / Options.
- To view a detailed description of all options and their article numbers go to GR/GM Receiver options.

Field description

The table below describes the fields in the Status: Receiver information, Options tab.

Press the **Refresh icon** to update the displayed data.

Instrument details	Description
Installed options	Lists all options installed on the receiver.
Options currently not installed	Lists all options that are currently not installed on the receiver but are available for purchase and installation.

To enable or disable the automatic update of the status page, please go to Receiver setup: Web server and activate or deactivate the **Automatic status page reload**.

Related topics

Status: Overview
Status: Receiver information
Receiver setup: Option management

Status: Position

Background Information

Shows the currently calculated position and the user entered reference position of the receiver. The receiver's position is configured via GNSS Management / Site name and coordinates.

- If the entered reference position and currently calculated position differ by more than 100 m, an error message is displayed.

Field Descriptions

The table below describes the fields in the Status: Position page.

Press the **Refresh icon** to update the displayed data.

Field	Position quality (Position type)	Reference Position
Latitude, Longitude, Ellipsoidal height	Shows the currently calculated position of the receiver in geodetic coordinates. The header for this column shows the current **Position quality** (Navigated, DGPS or RTK fixed) as calculated from the incoming correction data stream and the **Position type** (Reference station, Monitoring, Network RTK) as selected for the incoming real time data stream.	Shows the entered reference position of the receiver in geodetic coordinates.
X, Y, Z	Shows the currently calculated position of the receiver in Cartesian coordinates.	Shows the entered reference position of the receiver in Cartesian coordinates.
Update rate	The rate at which the position is currently calculated. Per default 1s. If an incoming real time data stream or an outgoing NMEA data stream are configured, the highest configured data rate is used.	

Displacement in X	The Displacement in X shows the difference in X between the currently calculated position and the entered Reference Position
Displacement in Y	The Displacement in Y shows the difference in Y between the currently calculated position and the entered Reference Position
Displacement in Z	The Displacement in Z shows the difference in Z between the currently calculated position and the entered Reference Position.

Local time	The current time in the local time system. Daylight saving time is not accounted for.
Position latency	The latency of the computed position. Latency is typically attributed to the time required for data transfer and computation of position.
HDOP	The Horizontal Dilution of Precision (HDOP) of the current position solution.
VDOP	The Vertical Dilution of Precision (VDOP) of the current position solution.
GDOP	The Geometric Dilution of Precision (GDOP) of the current position solution.
PDOP	The Position Dilution of Precision (PDOP) of the current position solution.
Position	2D coordinate quality of the computed position.

quality	
Height quality	Height quality of the computed position.

To enable or disable the automatic update of the status page, please go to Receiver setup: Web server and activate or deactivate the **Automatic status page reload**.

Related topics

Status: Overview

GNSS management: Site name and coordinates

Status: Tracking

Status tracking: General

Field Description

The table below describes the fields in the Status: General tab.

The information shown is dependent on the settings configured on the GNSS management: Tracking page and which satellite options are available on the receiver.

If the satellite health setting has been changed to a user defined setting in the GNSS management: Tracking page, then the satellite PRN will be displayed in brackets to indicate that this is not the almanac transmitted health status for that satellite.

Press the **Refresh icon** to update the displayed data.

Field	Description
Date of GPS almanac	The date and time of the GPS almanac.
Date of GLONASS almanac	The date and time of the GLONASS almanac. Only available for receivers with the GLONASS option.
Date of GALILEO almanac	The date and time of the GALILEO almanac. Only available for receivers with the GALILEO option.
Date of BeiDou almanac	The date and time of the BeiDou almanac. Only available for receivers with the BeiDou option.
Date of QZSS almanac	The date and time of the QZSS almanac. Only available for receivers with QZSS option.
Time signal	Shows the oscillator configured on the receiver. If no external oscillator is used, **Internal clock** is shown. If an external oscillator is configured with the oscillator fallback option active and no time signal was detected for more than 5 minutes or the antenna was disconnected for more than 5 minutes, the receiver starts using the internal clock instead of the selected external oscillator. A warning message will be shown in this field that a fallback to internal oscillator occurred. If an external oscillator is selected but not connected, the receiver will not track any satellite signals.

Satellite Health	GPS, GLONASS, Galileo, BeiDou and QZSS
Healthy	Lists the PRN numbers of the healthy satellites.
Bad	Lists the PRN numbers of the unhealthy satellites. The satellites are available in the almanac but are flagged unhealthy.
Not available	Lists the PRN numbers of the unavailable satellites. The satellites are not available in the almanac.

To enable or disable the automatic update of the status page, please go to Receiver setup: Web server and activate or deactivate the **Automatic status page reload**.

If the health status of a satellite is changed by a user and is different to what is sent in the broadcast ephemeris, this satellite is shown in brackets. Go to GNSS management: Tracking to changes the health status of a satellite.

Related topics

Tracking: GPS
Tracking: GLONASS
Tracking: GALILEO
Tracking: SBAS
Tracking: BEIDOU
Tracking: QZSS

GNSS management: Tracking

Status tracking: GPS

Field Description

The table below describes the fields in the Status: GPS tab.
The information shown is dependent on the settings configured on the GNSS management: Tracking page and which satellite options are available on the receiver.

Press the **Refresh icon** to update the displayed data.

Field	Description
Sat	The Pseudo Random Noise (PRN) number of the satellite.
Elevation	The elevation of the satellite in degrees. An arrow is shown to indicate if the satellite is rising or setting.
Azimuth	The azimuth of the satellite in degrees.
S/N L1	The signal to noise ratio on L1. The number is shown in brackets if the signal is not currently being used in the position calculations.
S/N L2P	The signal to noise ratio on L2P. The number is shown in brackets if the signal is not currently being used in the position calculations.
S/N L2C	The signal to noise ratio on L2C. The number is shown in brackets if the signal is not currently being used in the position calculations.
S/N L5	The signal to noise ratio on L5. The number is shown in brackets if the signal is not currently being used in the position calculations.
URA	The User Range Accuracy (URA) as transmitted in the broadcast navigation message. Only available for GPS satellites.
IODE	The Issue Of Data Ephemeris (IODE) of the currently used broadcast navigation message. Only available for GPS satellites.

Health	Description
Healthy	Lists the PRN numbers of the healthy satellites.
Bad	Lists the PRN numbers of the unhealthy satellites. The satellites are available in the almanac but are flagged unhealthy.

Not available	Lists the PRN numbers of the unavailable satellites. The satellites are not available in the almanac.

To enable or disable the automatic update of the status page, please go to Receiver setup: Web server and activate or deactivate the **Automatic status page reload**.

If the health status of a satellite is changed by a user and is different to what is sent in the broadcast ephemeris, this satellite is shown in brackets. Go to GNSS management: Tracking to change the health status of a satellite.

Related topics

Tracking: General
Tracking: GLONASS
Tracking: GALILEO
Tracking: SBAS
Tracking: BEIDOU
Tracking: QZSS

GNSS management: Tracking

Status tracking: GLONASS

Field Description

The table below describes the fields in the Status: GLONASS tab.
The information shown is dependent on the settings configured on the GNSS management: Tracking page and which satellite options are available on the receiver.

Press the **Refresh icon** to update the displayed data.

Field	Description
Sat	The Slot number of the satellite.
Elevation	The elevation of the satellite in degrees. An arrow is shown to indicate if the satellite is rising or setting.
Azimuth	The azimuth of the satellite in degrees.
S/N L1	The signal to noise ratio on L1. The number is shown in brackets if the signal is not currently being used in the position calculations.
S/N L2P	The signal to noise ratio on L2P. The number is shown in brackets if the signal is not currently being used in the position calculations.
S/N L2C	The signal to noise ratio on L2C. The number is shown in brackets if the signal is not currently being used in the position calculations.

Health	Description
Healthy	Lists the Slot number of the healthy satellites.
Bad	Lists the Slot number of the unhealthy satellites. The satellites are available in the almanac but are flagged unhealthy.
Not available	Lists the Slot number of the unavailable satellites. The satellites are not available in the almanac.

To enable or disable the automatic update of the status page, please go to Receiver setup: Web server and activate or deactivate the **Automatic status page reload**.

If the health status of a satellite is changed by a user and is different to what is sent in the broadcast ephemeris, this satellite is shown in brackets. Go to GNSS management: Tracking to change the health status of a satellite.

Related topics

Tracking: General
Tracking: GPS
Tracking: GALILEO
Tracking: SBAS
Tracking: BEIDOU
Tracking: QZSS

GNSS management: Tracking

Status tracking: GALILEO

Field Description

The table below describes the fields in the Status: GALILEO tab.
The information shown is dependent on the settings configured on the GNSS management: Tracking page and which satellite options are available on the receiver.

Press the **Refresh icon** to update the displayed data.

Field	Description
Sat	The Pseudo Random Noise (PRN) number of the satellite.
Elevation	The elevation of the satellite in degrees. An arrow is shown to indicate if the satellite is rising or setting.
Azimuth	The azimuth of the satellite in degrees.
S/N E1	The signal to noise ratio on E1. The number is shown in brackets if the signal is not currently being used in the position calculations.
S/N E5a	The signal to noise ratio on E5a. The number is shown in brackets if the signal is not currently being used in the position calculations.
S/N E5b	The signal to noise ratio on E5b. The number is shown in brackets if the signal is not currently being used in the position calculations.
S/N ABOC	The signal to noise ratio on Alt-Boc. The number is shown in brackets if the signal is not currently being used in the position calculations.

Satellite Health	
Healthy	Lists the PRN numbers of the healthy satellites.
Bad	Lists the PRN numbers of the unhealthy satellites. The satellites are available in the almanac but are flagged unhealthy.
Not available	Lists the PRN numbers of the unavailable satellites. The satellites are not available in the almanac.

To enable or disable the automatic update of the status page, please go to Receiver setup: Web server and activate or deactivate the **Automatic status page reload**.

If the health status of a satellite is changed by a user and is different to what is sent in the broadcast ephemeris, this satellite is shown in brackets. Go to GNSS management: Tracking to change the health status of a satellite.

Related topics

Tracking: General
Tracking: GPS
Tracking: GLONASS
Tracking: SBAS
Tracking: BEIDOU
Tracking: QZSS

GNSS management: Tracking

Status tracking: SBAS

Field Description

The table below describes the fields in the Status: SBAS tab.
The information shown is dependent on the settings configured on the GNSS management: Tracking page and which satellite options are available on the receiver.

Press the **Refresh icon** to update the displayed data.

Field	Description
Icon	Satellite is used for calculating a DGPS position.
Sat	The Pseudo Random Noise (PRN) number of the satellite.
System	The SBAS satellite system.
S/N L1	The signal to noise ratio on L1. The number is shown in brackets if the signal is not currently being used in the position calculations.

To enable or disable the automatic update of the status page, please go to Receiver setup: Web server and activate or deactivate the **Automatic status page reload**.

If the health status of a satellite is changed by a user and is different to what is sent in the broadcast ephemeris, this satellite is shown in brackets. Go to GNSS management / Tracking to change the health status of a satellite.

Related topics

Tracking: General
Tracking: GPS
Tracking: GLONASS
Tracking: GALILEO
Tracking: BEIDOU
Tracking: QZSS

GNSS management: Tracking

Status tracking: BEIDOU

Field Description

The table below describes the fields in the Status: BEIDOU tab.
The information shown is dependent on the settings configured on the GNSS management: Tracking page and which satellite options are available on the receiver.

Press the **Refresh icon** to update the displayed data.

Field	Description
Sat	The Pseudo Random Noise (PRN) number of the satellite.
Elevation	The elevation of the satellite in degrees. An arrow is shown to indicate if the satellite is rising or setting.
Azimuth	The azimuth of the satellite in degrees.
S/N B1	The signal to noise ratio on B1. The number is shown in brackets if the signal is not currently being used in the position calculations.
S/N B2	The signal to noise ratio on B2. The number is shown in brackets if the signal is not currently being used in the position calculations.

Satellite Health	
Healthy	Lists the PRN numbers of the healthy satellites.
Bad	Lists the PRN numbers of the unhealthy satellites. The satellites are available in the almanac but are

	flagged unhealthy.
Not available	Lists the PRN numbers of the unavailable satellites. The satellites are not available in the almanac.

To enable or disable the automatic update of the status page, please go to Receiver setup: Web server and activate or deactivate the **Automatic status page reload**.

Related topics

Tracking: General
Tracking:GPS
Tracking: GLONASS
Tracking: GALILEO
Tracking: SBAS
Tracking: QZSS

GNSS management: Tracking

Status tracking: QZSS

Field Description

The table below describes the fields in the Status: QZSS tab.
The information shown is dependent on the settings configured on the GNSS management: Tracking page and which satellite options are available on the receiver.
Press the **Refresh icon** to update the displayed data.

Field	Description
Sat	The Pseudo Random Noise (PRN) number of the satellite.
Elevation	The elevation of the satellite in degrees. An arrow is shown to indicate if the satellite is rising or setting.
Azimuth	The azimuth of the satellite in degrees.
S/N L1	The signal to noise ratio on L1. The number is shown in brackets if the signal is not currently being used in the position calculations.
S/N L2C	The signal to noise ratio on L2C. The number is shown in brackets if the signal is not currently being used in the position calculations.
S/N L5	The signal to noise ratio on L5. The number is shown in brackets if the signal is not currently being used in the position calculations.

Satellite Health	
Healthy	Lists the PRN numbers of the healthy satellites.
Bad	Lists the PRN numbers of the unhealthy satellites. The satellites are available in the almanac but are flagged unhealthy.
Not available	Lists the PRN numbers of the unavailable satellites. The satellites are not available in the almanac.

To enable or disable the automatic update of the status page, please go to Receiver setup: Web server and activate or deactivate the **Automatic status page reload**.

Related topics

Tracking: General
Tracking:GPS
Tracking: GLONASS
Tracking: GALILEO
Tracking: SBAS

Tracking: BEIDOU

GNSS management: Tracking

Status: Sky plot

Background Information

The sky plot shows which satellites are currently available and which ones are tracked. Satellites that are available but not tracked, e.g. due to obstructions, are shown in grey.
Clicking onto a satellite icon or the PRN number will open a text box showing its:

- Azimuth
- Elevation incl. an arrow indicating if satellite is ascending or descending
- SNR values of all available frequencies of this satellite.

Clicking onto the text box another time will make it disappear.

Note:
In order to display the sky plot, the browser must support SVG (Scalable Vector Graphics).

Browser	Version supporting SVG
Internet Explorer	9 and higher
Mozilla Firefox	4 and higher
Opera	11 and higher
Safari	5 and higher
Google Chrome	10 and higher

Status: Data streams

Status: Data streams - Outgoing

Background information

Displays a list of all configured Outgoing data streams from the receiver.

Field Description

The table below describes the fields in the Data streams / Outgoing tab.
The information shown is dependent on the settings configured via the Data stream wizard on the GNSS management: Data streams / Outgoing tab page
The data streams can be sorted by each field by clicking on the header.
Press the **Refresh icon** to update the displayed data.

Real time	Description
Icon	Data stream is active. Data stream is inactive.
Type/Message	The configured message type and version. Click on the underlined message type to open a list box showing how many satellites are used.
Data rate	The configured rate at which data is sent out.

Last sent	The latency of the last outgoing data stream sent in seconds.
Connection: port	The connection type and port over which the data stream is sent out.

LB2	Description
Icon	Data stream is active. Data stream is inactive.
Data	Shows which data output is active; **Meas.Data** (measurement data) and **Sat.Data** (satellite data).
Message	The configured message type (D or E) that is sent.
Data rate	The configured rate at which data is sent out.
Connection: port	The connection type and port used.

NMEA	Description
Icon	Data stream is active. Data stream is inactive.
Message	The configured NMEA messages activated for the outgoing data stream. Click the listed NMEA messages to view **additional properties**. **NMEA message properties** The table below describes the additional NMEA message properties that are shown when the underlined **NMEA Messages** are selected. **NMEA message properties** — **Description** **Message** — The configured NMEA messages activated for the outgoing data stream. **Rate** — The configured data rate for the NMEA message.
Connection: port	The connection type and port over which the data stream is sent out.

BINEX	Description
Icon	Data stream is active. Data stream is inactive.
Message	The configured BINEX messages activated for the outgoing data stream. Click the listed BINEX messages to view **additional properties**. **BINEX message properties** The table below describes the additional BINEX message properties that are shown when the underlined **BINEX Messages** are selected. **NMEA message properties** — **Description** **Message** — The configured BINEX messages activated for the outgoing data stream. **Rate** — The configured data rate for the BINEX message.
Connection: port	The connection type and port over which the data stream is sent out.

To enable or disable the automatic update of the status page, please go to Receiver setup: Web server and activate or deactivate the **Automatic status page reload**.

Related topics

GNSS management: Data streams overview
GNSS management: Outgoing data stream

Streaming session wizard: Configure real time out data stream
Streaming session wizard: Configure LB2 data stream
Streaming session wizard: Configure NMEA data stream
Streaming session wizard: Configure BINEX data stream

Status: Data streams - Incoming

Background information

Displays a list of all configured Incoming data streams from meteo and tilt devices that send data to the receiver.

Field Description

The table below describes the fields in the Data streams / Incoming tab.
The information shown is dependent on the settings configured via the Data stream wizard on the GNSS management: Data streams / Incoming tab page.

Press the **Refresh icon** to update the displayed data.

Meteo	Description
Name	The name of the configured meteo device.
Serial number	The serial number of the configured meteo device.
Data time	The time and date of the displayed temperature, pressure and humidity reading.
Temperature	The temperature recorded by the device at the data time.
Pressure	The pressure recorded by the device at the data time.
Relative humidity	The relative humidity recorded by the device at the data time.
Wind azimuth	The wind azimuth (deg) from the direction that the wind blows, recorded by the device at the data time.
Wind speed	The wind speed in meters per second (m/s), recorded by the device at the data time.
Rain Increment	The rain accumulation since last measurement in millimetres (mm), recorded by the device at the data time.
Hail indicator	The hail detected since last measurement in hits per square centimetre, recorded by the device at the data time.

The data messages listed above are not supported by all meteo sensors.

Tilt	Description
Name	The name of the configured tilt device.
Serial number	The serial number of the configured tilt device.
Data time	The time and date of the displayed temperature and inclination.
Temperature	The temperature recorded by the device at the data time.
Inclination X	The inclination X recorded by the device at the data time.
Inclination Y	The inclination Y recorded by the device at the data time.

To enable or disable the automatic update of the status page, please go to Receiver setup: Web server and activate or deactivate the **Automatic status page reload**.

Real time	Description
Icon	Data stream is active. Data stream is inactive.
Type/Message	The configured message type and version received and used for position correction. Click on the underlined message type to open a list box showing how many satellites are used.
Percent received	The percentage of data received versus expected within the last minute.

Last received	The latency of the last received correction information in seconds.
Connection: port	The connection type and port over which the data stream is received.

Related topics

GNSS management: Data streams overview
GNSS management: Incoming data streams

Streaming session wizard: Configure Meteo
Streaming session wizard: Configuration Tilt

Status: Logging sessions

Background Information

View status information about all configured logging sessions.

Configure or edit a logging session via GNSS management / Logging sessions. A logging session wizard will guide you through the procedure.

Field Description

The table below describes the fields in the Status: Logging session page.
The logging sessions can be sorted by each of these criteria by clicking on the header.

Field	Description
Icon	Logging session is active. Logging session is inactive. Smart clean-up is activated. Smart clean-up is activated and deleting files. Logging session is blocked by Smart clean-up. To activate or deactivate a session go to GNSS management / Logging session / Sessions tab. To activate or deactivate **Smart clean-up** go to GNSS management / Logging session / Smart clean-up tab.
Name	The name of the logging session.
Type	The configured logging session type (MDB, RINEX or Hatanaka) and if the session is **continuous** or **timed**.
Runtime	The time that the session has run or is running since it was last activated. For timed logging sessions this is the overall time of the session logging data to files.
#Files	The number of files logged in the session runtime and available on the SD card or USB device for this logging session. Please note: If logging sessions are configured and the SD card is formatted, the number of files for the logging sessions will not be updated immediately. This may take several minutes.

Logging session properties

The table below describes the additional logging session status information that is shown when the logging session **Name** is selected.

Field	Description

Session name	The configured logging session name.
Data type	The configured data type.
Session Priority	The configured session priority which determines the Smart clean-up tasks. Go to GNSS management / Logging sessions / Smart clean-up tab for further information and to enable the Smart clean-up functionality.
Session type	The configured session type, either **continuous** or **timed**. **Timed** allows specific logging intervals to be defined.
Logging rate	The configured rate at which the observations are logged.
Length of file	The configured file length. The file length defines how long data is written to one file before a new file is created.
Log doppler observations	Indicates if logging doppler observations is activated (yes) or deactivate (no) in the logging session.
Log SNR values	Indicates if logging SNR values in the RINEX file is activated (yes) or deactivate (no) in the logging session.
Store data to	Clicking on the SD card link opens an FTP connection to the folder on the SD card where the data for this logging session is stored. This is only possible when the FTP server access is enabled. To enable FTP server access, go to Receiver Setup / FTP server. The FTP access to the SD card may not work in all browsers. Set the FTP server access restrictions to allow anonymous access to ensure SD card access via the browser link. Go to Receiver Setup / FTP server.
Auto delete	Shows when the logging session files are automatically deleted. The SD card can run full when Auto delete is set to Never.
Archive to (GR25/50 only)	Only available if the logging session is writing data to an external USB drive. Indicates if the logging session is archived to an external USB drive. If an external USB drive it attached and configured for archiving, click on the link **External USB drive** to access the UDB drive via FTP. Some browsers have limitations concerning their FTP capabilities. Please use a dedicated FTP client in case you experience problems while accessing files via FTP.
Archive to FTP location	Indicates if the logging session is archived to an FTP location. If configured, the used FTP location is listed.
Remaining repeats	This field is only shown for timed logging sessions. Shows the number of repeats remaining.
Latest file	The file name of the last file that this logging session was written to. For RINEX and Hatanaka logging sessions it will always list the observation file name (*.10o).

Related Topics

Logging sessions: Overview

GNSS management: Logging sessions
GNSS management: Smart clean-up

Status: Ntrip caster

Background Information

Shows all the mount points configured on the local Ntrip caster. For each mount point the connection status and the connected source and clients are displayed.

Field description

The table below describes the fields on the Status: Ntrip caster page.

Press the **Refresh icon** to update the displayed information.

Menu option	Description
Icon	An icon is shown, indicating if an Ntrip source is connected to the mount point and sending data. Connections denied Connections allowed Connected
Mount point	Lists the names of all the configured mount points.
Ntrip source	Shows the IP address of the connected Ntrip source. If the field is blank, no Ntrip source is currently sending data to this mount point, Click on the underlined hostname to see the duration of the connection and the amount of data sent and received.
Ntrip clients #	Shows the number of Ntrip clients currently connected to this mount point.
Host / Duration	Shows the IP addresses of the clients connected to this mount point. If there are multiple clients connected, the longest connection is shown. Click on the IP address to open a pop up window. The pop up window shows the data volume sent and received on this mount point and lists all the connected client IP addresses and the connection duration.
Data type	The data type transmitted by this mount point.

Related Topics

Outgoing data stream wizard: Configure Ntrip server (source)
Ntrip caster: Overview
Ntrip caster: Caster tab
Ntrip caster: Mount points tab
Ntrip

Status: Port Summary

Background Information

Shows all ports used in the receiver configuration for data streams, remote access (OWI), FTP and web interface access. For each port the connection status and use case is displayed.

Field Description

The table below describes the fields on the Status: Port summary page.

Press the **Refresh icon** to update the displayed information.

Data Ports	Description
Icon	An icon is shown, indicating the data stream connection status. Disconnected Connecting Awaiting connection(s) Connected
Data connections: Port	The connection type and port number configured for the data stream.
# Connections	The number of connected users on each port. With the default setting, a maximum of one user is possible. If the GRL115 Multi-Client and Ntrip Caster option is installed on the receiver and the configuration is set accordingly, more than one connection per TCP/IP port is possible. In this case, the number of connected users and the number of possible connections is shown.
Host / Duration	The IP address of the client/server connected to the TCP/IP port. If there are multiple connections to the port, the longest connection is shown. Click on the IP address to open a pop up window. The pop up window shows the data volume sent and received on this port and lists all connected host IPs and the connection duration.
Data type	The data type transmitted by the port.

Remote ports	Description
Icon	An icon is shown to indicated the remote connection status. Disconnected Connecting Awaiting connection(s) Connected
Remote connections: Port	The connection type and port number configured for the remote port.
# Connections	The number of connected users on each port. For each remote port a maximum of one connection per port is possible.
Host / Duration	The IP address connected to the port. Click on the IP address to open a pop up window. The pop up window shows the data volume sent and received on this port and lists the connected host IP address and the connection duration.

HTTP/FTP ports	Description
Icon	An icon is shown, indicating the port status. Disconnected Awaiting connection(s) Connected
Port type	Shows if HTTP or HTTPS is active and differentiates between FTP data ports and FTP control points.
Port number	The configured port number.

To enable or disable the automatic update of the status page, please go to Receiver setup: Web server and

activate or deactivate the **Automatic status page reload**.

Related topics

GNSS management: Data streams
Receiver setup: Spider and remote access
Receiver setup: FTP server
Receiver setup: Web server

Status: Antenna

Background information

This page displays the currently configured antenna for this site.

Field Description

The table below describes the fields in the Status: Antenna page.
The information shown is dependent on the antenna selected in **GNSS management: Antenna management** on the Select antenna tab.

Antenna settings	Description
Antenna	The currently configured antenna.
Type	Shows if the configured antenna is a default antenna or a user defined antenna.
IGS name	Shows the IGS name of the antenna as it will appear in the RINEX header.
Height reading	The antenna height reading.
Measurement type	The measurement type used for the height reading, either Vertical or Slope.
Vertical offset	The distance from the physical reference point to the point the height reading is measured to on the antenna.
Horizontal offset	Shows the horizontal offset for slope height readings.

To enable or disable the automatic update of the status page, please go to Receiver setup: Web server and activate or deactivate the **Automatic status page reload**.

Related topics

GNSS management: Antenna management

Status: Event log

Background Information

The Event log contains a list of status and information messages produced by the receiver. The Event log is updated every 5 seconds. The messages from the Event log can be sent to an administrator via an event email. Sending event emails can be configured and activated via **Receiver setup / Event log**.
Event log messages can be filtered to easily find specific information.

Field Description

The table below describes the fields in the Status: Event log page.

Press the **Refresh icon** to update the displayed data.

Field	Description
Icon	**Warning message** This level of receiver message indicates that vital functionality on the receiver was interrupted. Action should be taken by an administrator to ensure correct receiver operation. **General message** A general message indicates a problem with a receiver task that does not influence the most important functionality. Investigate by checking the receiver configuration. **Information message** Information messages reflect events from the normal receiver activity. No action is required by the administrator.
Date / Time	The local date and time of the message.
Message	The text message created by the receiver.

Download	Press to download the event log content. The content of the event log will be displayed in a new browser window and can be stored on the PC.
Filter	Filter the event log content to find specific information. The filter settings allow sorting of the messages by time, content or message type.
Clear filter	Press to clear the filtering of the event messages and return to the main Event log page.
Filter	Indicates that an event log filter is currently applied. Press to change the filter details.

Filter Event log content

Select the Filter icon . Select the filtering limits and then press the Apply icon .

Field	Description
From/To	Select the interval to view messages **From** (the selected data and time) and **To** (the selected data and time).
Show verbose messages	Activate or deactivate verbose messages. Verbose messages provide additional information about the receiver status that are not shown per default, in order to keep the event log clearer. **Verbose mode will be deactivated after closing the browser, logging out of the receiver, or rebooting the receiver.**
Content	Filter the messages by selecting the messages content category, such as **Logging** or **Tracking**.
Message Type	Filter the messages by selecting the level of importance.

To enable or disable the automatic update of the status page, please go to Receiver setup: Web server and activate or deactivate the **Automatic status page reload**.

Related topics

Status: Network connections

Background information

Displays all active network connections used to connect the receiver to a network, including DynDNS setup if configured.

Possible connections

- Ethernet
- Mobile Internet
- WLAN
- TCP/IP over USB
- DynDNS
- Bluetooth

Field Descriptions

The table below describes the fields in the Status: Network connections page.

Default gateway shown in the status header indicates if the specific connection is set as the main gateway.

Press the **Refresh icon** to update the displayed data.

Ethernet	Description
Status	The status of the configured Ethernet connection, **Connected** or **Disconnected**.
Receiver hostname	The hostname for receiver access in a DHCP network.
IP address type	Indicates if the IP address was assigned by DHCP or manually configured.
IP address	The IP address used for accessing the receiver via Ethernet connection.
Subnet mask	The subnet mask for the connection.
Gateway	The gateway for the connection.
DNS servers	The IP addresses of the DNS servers that are used.
Data sent	The amount of data sent out from this connection.
Data received	The amount of data received by this connection.
MAC address	The MAC address of the receivers Ethernet device.

Mobile Internet	Description
Status	The status of the configured network connection, **Connected** or **Disconnected**.
Duration	The duration or uptime of this connection without interruption.
IP address type	Indicates if the IP address was assigned by DHCP or manually configured.
IP address	The current IP address of the connection.
Subnet Mask	The subnet mask for the connection.
Data sent	The amount of data sent out from this connection.
Data received	The amount of data received by this connection.
Device name	The name of the mobile Internet device used for this connection.
Firmware	The version of the firmware installed on the attached mobile internet device.
Port	The port used for connecting the mobile Internet device.

WLAN	Description
Status	The status of the configured WLAN connection, **Not used, Connecting** or **Connected**.
Receiver hostname	The hostname for receiver access in a DHCP network.
IP address type	Indicates if the IP address was assigned by DHCP or manually configured.
IP address	The IP address used for accessing the receiver via WLAN connection.
Subnet mask	The subnet mask for the connection.
Gateway	The gateway for the connection.

DNS servers	The IP addresses of the DNS servers that are used.
Data sent	The amount of data sent out from this connection.
Data received	The amount of data received by this connection.
MAC address	The MAC address of the receiver's WLAN device.
RSSI / Signal strength	The signal strength of the active WLAN connection. The displayed signal strength is an interpretation (No signal, verly low, low, good, very good, excellent) of the RSSI (receiver signal strength indication) value for the active network. The RSSI values are mapped as follows: • RSSI < -90 or WLAN network not seen at all => "No signal" • RSSI >= -90 and < -81 => "Very low" • RSSI >= -81 and < -71 => "Low" • RSSI >= -71 and < -67 => "Good" • RSSI >= -67 and < -57 => "Very good" • RSSI >= -57 => "Excellent" For ad hoc connections an RSSI value cannot be provided. Thus "Available" will be shown.
WLAN profile	The name of the active WLAN connection.

By default, the Ethernet connection is set as the default gateway. The default gateway can be changed to the mobile Internet or WLAN connection (For all GR25 with a WLAN radio and the GRL120 WLAN option installed). The configured connection used as the default gateway is displayed on top and shows (default gateway) in the header.

If backup communication is enabled and a second gateway is available, this backup gateway is used when the default gateway becomes unavailable. The backup gateway then shows (current) in the header.

TCP/IP over USB	Description
Status	The status of the configured network connection, **Connected** or **Disconnected**.
IP address	The default IP address for accessing the web interface via a USB device.
Subnet Mask	The default subnet mask for the connection.
Data sent	The amount of data sent out from this connection, in bytes.
Data received	The amount of data received by this connection, in bytes.
Device name	States that this USB connection is established via the USB host port.

DynDNS	Description
Status	Indicates if updating the IP address of the receiver at the DynDNS service was successful.
Service provider	The DynDNS service provider configured.
Last IP update	The date and time when the IP address was last updated at the DynDNS service.
Hostname	The hostname of the receiver that is registered with the DynDNS service.
Registered IP address	The IP address sent to the DynDNS service. This IP address is used to access the receiver when entering the URL in a browser window.

Bluetooth	Description
Status	The status of the configured bluetooth connection, Disabled, Enabled – awaiting connection or Connected.
Bluetooth name	The name other devices will detect the GR25 Bluetooth device with. Equals the configured hostname.
IP address type	The default IP address for accessing the GR25 via the Bluetooth device.
Subnet mask	The default subnet mask for the connection.
Data sent	The amount of data sent out from this connection.
Data received	The amount of data received by this connection.
Device name	States that this connection is established via the Bluetooth local area network.

To enable or disable the automatic update of the status page, please go to Receiver setup: Web server and activate or deactivate the **Automatic status page reload**.

Related topics

Network connections: Overview
Network connections: General
Network connections: Ethernet
Network connections: Mobile Internet
Network connections: Bluetooth

How to set up a mobile Internet connection
How to use Bluetooth on a GR25

Status: System resources

Background information

Shows the status of the connected power supply and the used/free space on the inserted SD card.

When HTTPS mode is used in Internet Explorer, the graphs shown on the System resources page may not display correctly. Internet Explorer does not support SVG natively. Please use another browser such as Mozilla Firefox or Google Chrome.

If you have installed the SVG viewer on your computer and then switch to a newer version of IE (i.e. from IE8 to IE9), the SVG viewer installation might be deleted. If you cannot see the graphics on this page, please re-install the SVG viewer.

Field Descriptions

The table below describes the fields in the Status: System resources page.

<table>
<tr><th>Power</th><th>Description</th></tr>
<tr><td>Available capacity
GR10/30 & GM10/30</td><td>The measured voltage of the external power source.</td></tr>
<tr><td>External 1
GR25/50</td><td>The measured voltage of the external power source 1.</td></tr>
<tr><td>External 2
GR25/50</td><td>The measured voltage of the external power source 2.</td></tr>
<tr><td>Power over Ethernet
GR25/50</td><td>The measured voltage of the external Power over Ethernet (if enabled).</td></tr>
<tr><td>Internal battery
GR25/50</td><td>The available capacity of internal battery.
<table>
<tr><th>Icon</th><th>Status</th></tr>
<tr><td> 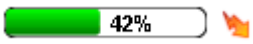
</td><td>Charging is enabled, valid external supply is detected (>18V), and charging is currently active.</td></tr>
<tr><td> 
</td><td>Charging is enabled, valid external supply is detected (>18V), but charging is not currently active (e.g. battery is full).</td></tr>
</table></td></tr>
</table>

	42%	Charging is enabled but an invalid external supply is detected (<18V).
	42%	Charging is disabled.
	--	No internal battery is detected.
	Battery error!	Battery error.
Power Consumption GR25/50	The current power consumption of the receiver	

SD Card	Description
Total size	The total storage space available on the SD card.
Memory left	The available storage space remaining on the SD card.

External USB drive GR25/50	Description
Total size	The total storage space available on the external USB drive.
Memory left	The available storage space remaining on the external USB drive.

Receiver internal temperature	Description
Current temperature	Shows the current temperature of the processor board in the receiver [units = degrees Celsius]. This information will be updated every 5 seconds.
All time high	Shows the maximum temperature since the last reset of the all-time high/low value. The update rate of this value is 5 seconds. This value will be kept after a reboot of the receiver if the temperature at reboot does not exceed it.
All time low	Shows the minimum temperature since the last reset of the all-time high/low value. The update rate of this value is 5 seconds. This value will be kept after a reboot of the receiver if the temperature at reboot does not fall below it.

CPU load	Description
Current CPU usage	Displays the current CPU load.

CPU load history	Description
Diagram	The CPU load history diagram shows the **CPU load** for the last 10 minutes. The graph is visible after a few minutes and is only shown when this Status page is accessed. If you leave the status page, all information in the graph is deleted.

To enable or disable the automatic update of the status page, please go to Receiver setup: Web server and activate or deactivate the **Automatic status page reload**.

GNSS management

GNSS management: Overview

Configure all GNSS data related settings, such as logging sessions, data streams and the tracking settings. Or enter site specific information such as the site name, position and antenna details.

Menu option	Description
Site name and coordinates	Enter the site name and coordinates of the receiver.
Tracking	Configure the satellite tracking settings. • General • GPS • GLONASS • GALILEO • BEIDOU

	• QZSS
Data streams	Create, configure and edit incoming and outgoing data streams.
Logging sessions	Create, configure and edit logging sessions for writing MDB, RINEX, Hatananka or NMEA files. Enable or disable the Smart clean-up of logging session data on the receiver to ensure optimal use of the SD card size and data availability.
FTP and USB locations	Configure, edit and delete FTP locations that are used to push data created by a logging session on the receiver to an external FTP server. View the attached USB device and check for a possible queue of files to be pushed.
Antenna management	Select the used reference station antennas and configure, edit or delete all available antennas.
Wake-up sessions	Configure, edit and delete specific intervals for the receiver to be turned on or off.
PPS and Event In	GR25/50: • Activate PPS to send out an electric pulse at a specified time interval. • Enable Event In to receive pulses from an external device connected to serial port 2.
Velocity & Displacement Engine	Enable or disable the Velocity & Displacement Engine.

GNSS management: Site name and coordinates

Background Information

Site name and coordinates is used to enter the reference station information that will be used for real time correction messages and raw data logging.

Changing the site name and/or coordinates interrupts logging and streaming. If any of these settings are changed when a logging session is active then the current files will be finalized and new file(s) will start to be logged.

Setting Descriptions

The table below describes the settings that can be configured on the Site name and coordinates page.

Naming	Description
Site name	Enter the name of the site. This is a unique identifier for the location of the receiver. The site name field can be left blank. • The maximum number of characters is 16. • Only certain **ASCII characters** are allowed. 0123456789 ABCDEFGHIJKLMNOPQRSTUVWXYZ abcdefghijklmnopqrstuvwxyz - _ . (hyphen, underscore, period and space are also allowed)
Site code	Enter a four character site code as an identifier for the instrument. The code is used for the first four characters of the raw data (MDB and RINEX) file names. • The maximum number of characters is 4.

	• Only certain **ASCII characters** are allowed. 0123456789 ABCDEFGHIJKLMNOPQRSTUVWXYZ abcdefghijklmnopqrstuvwxyz - _ (hyphen and underscore are also allowed)
Marker name	Enter a marker name. • The marker name is used to occupy the equivalent entry in the RINEX header when creating RINEX files for this site. • If no Marker Name is entered then it will default to the Site Name. If no site name is entered, the marker name field in the RINEX header will stay empty. • The maximum number of characters is 60. • Only certain **ASCII characters** are allowed. 0123456789 ABCDEFGHIJKLMNOPQRSTUVWXYZ abcdefghijklmnopqrstuvwxyz - _ . (hyphen, underscore, period and space are also allowed)
Marker number	Enter a marker number. • The marker number is used to occupy the equivalent entry in the RINEX header when creating RINEX files for this site. • If no Marker Number is entered then it will default to the Site Code. • The maximum number of characters is 20. • Only certain **ASCII characters** are allowed. 0123456789 ABCDEFGHIJKLMNOPQRSTUVWXYZ abcdefghijklmnopqrstuvwxyz - _ . (hyphen, underscore, period and space are also allowed)

Coordinates	Description
Coordinate Type	Choose the coordinate type, either Geodetic or Cartesian.
Latitude	The latitude of the site.
Longitude	The longitude of the site.
Ellipsoidal height	The ellipsoidal height of the site.

Time settings	Description
Time zone	Select the time zone. Daylight saving time is not accounted for.

Get current position	Click this link to apply the currently computed navigated position as the reference position for this site. This is not an accurate coordinate with a known accuracy but merely an estimate. Without knowing the reliability of the coordinate of the

	reference station, the reference station should not be used for relative positioning. A position adjustment is necessary to calculate the exact coordinate for the reference position. The **current position** helps to set up reference station receivers to collect data for this position adjustment. The Save button must be pressed to store the current position.
Restore default values	Press to restore the default values. **The restore default button fills all fields with the default values and stores these values. Pressing the save button is not necessary. When accepting the confirmation message, all settings on this page are overwritten with the default settings.**

Related Topics

Status: Position
Configure coordinates and site name step-by-step

GNSS management: Tracking

GNSS management: Tracking General

Background information

If an external oscillator is selected but not connected, the receiver will not track any satellite signals.
If an external oscillator is selected but not connected and the fallback option is activated, the internal clock will be used.

Changing the Satellite system, Satellite signals and/or Cut-off angle interrupts logging and streaming. If any of these settings are changed while a logging session is active, the current file will be finalized and a new file will start to be logged.

GPS and GLO L2C cannot be activated while an incoming real time data stream is activated for fixed position calculation.
If you want to enable GPS and GLO L2C tracking make sure to first disable the incoming real time data stream.

Exclusive GPS L2C tracking is not possible. This means that enabling GPS L2C only, but not GPS L2P(Y), will implicitly activate L2P(Y) data to be tracked on satellites that do not provide L2C.
If L2P(Y) and L2C is enabled, L2P(Y) will be tracked for all GPS satellites and L2C where available.

Setting Descriptions

The table below describes the settings that can be configured on the Tracking General tab.

Satellite system	Description
	Activate the satellite system(s) to be tracked.

	The availability of the different satellite systems depends on the installed receiver options. When activating a satellite system, the default frequencies are activated if the corresponding option key is available. Default frequencies are the frequencies used for position calculation. Non default frequencies can be activated manually. When deactivating a satellite system, all frequencies of the respective satellite system are deactivated. Activate / deactivate the check boxes to track the different signals of each satellite system. All signals other than L1 are only available if the corresponding option key is installed. The Tools / Options page provides an overview of all purchased options that are currently activated on the receiver and a detailed description of all available options. If needed, specify a certain SBAS satellite systems in the **Track sat. syst.** list box or leave at **Automatic** to have the receiver automatically select the SBAS system. Alternatively, select **All visible** to use all SBAS satellite systems that are tracked by the receiver. **Test** mode must be selected if the desired SBAS system is not yet fully operational. It is suggested that the **Automatic** setting is used. This ensures that the receiver automatically selects the SBAS system which is valid for the current position of the receiver.

SBAS -DGPS	Description
Use SBAS for DGPS	Activate to use SBAS to gain a DGPS position When using SBAS corrections for calculating a DGPS position, it is important to select a satellite in the **Satellite to be used** list box that belongs to an SBAS system that is valid within the area of your reference station.
Satellite to be preferred	Use the **Satellite to be preferred** list box to select a specific SBAS satellite to be preferred for obtaining a DGPS solution. **I**f a specific system is selected in the **Track sat. syst.**, select a satellite from that system in the **Satellite to be used** list box. If SBAS is used to calculate a Differential code position solution, SBAS observations are also written to the LB2 data stream and into all logged MDB and RINEX files. Deactivate the **Use for DGPS** list box to calculate a position without using SBAS corrections. If one or more SBAS satellites are tracked but not used for DGPS, the SBAS observations are still contained in the LB2 stream as well as in MDB and RINEX files. If **All visible** is selected in the **Track sat. syst.** list box, all visible SBAS satellites are tracked. Up to 4 SBAS satellites can be tracked at one time. Since it cannot be predicted which satellites

	will be tracked with this setting, DGPS functionality is disabled with this setting, as it cannot be guaranteed that the satellite for DGPS is tracked when visible. The assignment of SBAS satellite numbers to certain SBAS systems is still subject to change. For the current list of PRN assignments go to: http://www.losangeles.af.mil/library/factsheets/factsheet.asp?id=8618 and select the **L1 C/A PRN Code Assignment** link.

Tracking settings	Description
Cut-off angle	Enter the elevation cut off angle.
Code smoothing	Select **Smoothed** or **Not smoothed**. • **Smoothed**: Carrier phase observations are used to smooth the code pseudo-range in order to reduce multipath and ionospheric bias. • **Not smoothed**: Raw code pseudo-ranges are recorded.
Message on loss of lock	Select the desired behaviour when a loss of lock occurs. When checked, a message appears in the event log stating that a loss of lock has occurred.

Oscillator	Description
Oscillator	An external oscillator can be used to provide a better quality time signal to the receiver than that of the receiver's internal clock. When using an external oscillator, the same external oscillator can be used for a number of receivers, so that each receiver is guaranteed to be tracking satellites using the same time signal. An external oscillator is attached to the receiver via the OSC port. Select **Internal** to use the receivers internal clock, or if an external oscillator is connected to the oscillator port, select the type of external oscillator. • **TCXO:** A temperature compensated crystal oscillator (TCXO) is used. • **OCXO:** An oven controlled crystal oscillator (OCXO) is used. • **Rubidium:** A rubidium based external oscillator is used. • **Cesium:** A cesium based external oscillator is used. • **H-maser:** A hydrogen based external oscillator is used. The H-maser setting can be used to set up a user defined external oscillator. If an external oscillator is selected but not connected, the receiver will not track any satellite signals.
Fallback to internal oscillator	Only available when an external oscillator is selected. When activated and the external clock signal is not available for more than 5 minutes, the receiver will switch to the internal clock. Once the fall back has occurred, the oscillator icon in the Status/Tracking section of the web interface will turn yellow . In addition, the **Check/Revert to external oscillator** button will be displayed. This button allows checking if the external oscillator is available again. When using this button, the receiver will check for a time signal from

	the external oscillator and switch to the external oscillator when available. If the external oscillator is still not available when this button is pressed, a message will be shown in the event log and the receiver will continue to use the internal oscillator. This is a single fallback after 5 minutes without automatic return to external oscillator. The fallback to internal oscillator will also occur when the antenna is disconnected for more than 5 minutes.
Frequency	Select the frequency at which the external oscillator is set to work.
Process noise element h_0, h_{-1} and h_{-2}	Only available when using an H-maser external oscillator. Set the values for the 3 process noise elements of the linear portion of the clock model. There are the h_0, h_{-1} and h_{-2} elements of the power law spectral density model used to describe the frequency noise characteristics of an oscillator.

Restore default values	Press to restore the default values. The restore default button fills all fields with the default values and stores these values. Pressing the save button is not necessary. When accepting the confirmation message, all settings on this page are overwritten with the default settings.
Initialize measurement engine	This button redirects you to the Tools page where you can re-initialize the measurement engine. Then all ephemeris and almanac data will be deleted and the position computation will be restarted.

SBAS note

For SBAS logging, the following behaviour will be seen:

Event log shows a complete loss of lock message when no SBAS data is tracked.
MDB and RINEX logging will always log the current SBAS observations when activated.
NMEA position output shows the following

	Description
SBAS is off	Navigated position.
SBAS use for DGPS is on	Differential code position.
SBAS use for DGPS satellite is lost	Last position before SBAS data was lost for 60s then reset to navigated position.
SBAS use for DGPS satellite become available	Differential code position.

Background information on external oscillators

An unsteered oscillator can be approximated by a three-state clock model, with two states representing the range bias and range bias rate, and a third state assumed to be a Gauss-Markov (GM) process representing the range bias error generated from satellite clock dither. The third state is included because the Kalman filter assumes an (unmodeled) white input error. The significant correlated errors produced by satellite clock dither are obviously not white and the Markov process is an attempt to handle this kind of short term variation.

The internal units of the new clock model's three states (offset, drift and GM state) are metres, metres per second and metres. When scaled to time units for the output log, these become seconds, seconds per second and seconds, respectively. Note that the old units of the third clock state (drift rate) were metres per second per second.
The user has control over 3 process noise elements of the linear portion of the clock model. These are the h_0, h_{-1} and h_{-2} elements of the power law spectral density model used to describe the frequency noise characteristics of oscillators:

$$S_y(f) = \frac{h_{-2}}{f^2} + \frac{h_{-1}}{f} + h_0 + h_1 f + h_2 f^2$$

with *f* being the sampling frequency and *Sy(f)* the clock's power spectrum. Typically only h, and h_{-2} affect the clock's Allan variance and the clock model's process noise elements.

Before you use an optional external oscillator, several clock model parameters must be set. There are default settings for a Temperature-Compensated Crystal Oscillator (TCXO), ovenized crystal oscillator (OCXO), Rubidium and Cesium standard. When using a Hydrogen-Maser you can either use the default values of the clock parameters or choose to use customized settings

Clock parameters - Default values

Clock type	h_0	h_{-1}	h_{-2}
TCXO	1.0 e-21	1.0 e-20	1.0 e-20
OCXO	2.51 e-26	2.51 e-23	2.51 e-22
Rubidium	1.0 e-23	1.0 e-22	1.3 e-26
Cesium	2.0 e-20	7.0 e-23	4.0 e-29

Related topics

GNSS management: Tracking GPS
GNSS management: Tracking GLONASS
GNSS management: Tracking GALILEO
GNSS management: Tracking BEIDOU
GNSS management: Tracking QZSS

Configure tracking settings step-by-step

GNSS management: Tracking GPS

Background information

Tracking GPS options, may be used to control which health settings are used for each GPS satellite tracked by the receiver.

Setting Descriptions

The table below describes the settings that can be configured on the Tracking GPS tab.

Field	Description
Satellite health	For each tracked satellite it is possible to set the health as **Auto**, **Healthy** or **Bad**. Use the drop down list to change the satellite health for all satellites to the same value.
Satellite	The PRN satellite number.
Health from almanac	Shows the health setting for this satellite as received from the broadcast navigation message. **NA**, is shown for satellites where no health information is available in the ephemeris.
User defined health	Shows the configured health setting for each satellite. Either **Auto**, **Healthy** or **Bad**. This field can be edited via the list box. If the setting is set to **Auto**, the satellite is used with the health received from the ephemeris. If the setting is different from **Auto**, the user defined health setting is used.

Related topics

GNSS management: Tracking General
GNSS management: Tracking GLONASS
GNSS management: Tracking GALILEO
GNSS management: Tracking BEIDOU
GNSS management: Tracking QZSS

GNSS management: Tracking GLONASS

Background information

Tracking GLONASS options may be used to control which health settings are used for each GLONASS satellite tracked by the receiver.

Setting Descriptions

The table below describes the settings that can be configured on the Tracking GLONASS tab.

Field	Description
Satellite health	For each tracked satellite it is possible to set the health as **Auto**, **Healthy** or **Bad**. Use the drop down list to change the satellite health for all satellites to the same value.
Satellite	The PRN satellite number.
Health from almanac	Shows the health setting for this satellite as received from the broadcast navigation message. **NA**, is shown for satellites where no health information is available in the ephemeris.
User defined health	Shows the configured health setting for each satellite. Either **Auto**, **Healthy** or **Bad**. This field can be edited via the list box. If the setting is set to **Auto**, the satellite is used with the health received from the ephemeris. If the setting is different from **Auto**, the user defined health setting is used.

Related topics

GNSS management: Tracking General
GNSS management: Tracking GPS
GNSS management: Tracking GALILEO
GNSS management: Tracking BEIDOU
GNSS management: Tracking QZSS

GNSS management: Tracking GALILEO

Background information

Tracking Galileo options may be used to control which health settings are used for each Galileo satellite tracked by the receiver.

Setting Descriptions

The table below describes the settings that can be configured on the Tracking GALILEO tab.

Field	Description
Satellite health	For each tracked satellite it is possible to set the health to **Auto**, **Healthy** or **Bad**. Use the drop down list to change the satellite health for all satellites to the same value.
Satellite	The PRN satellite number.
Health from almanac	Shows the health setting for this satellite as received from the broadcast navigation message. **NA**, is shown for satellites where no health information is available in the almanac and ephemeris.

User defined health	Shows the configured health setting for each satellite. Either **Auto**, **Healthy** or **Bad**. This field can be edited via the list box. If the setting is set to **Auto**, the satellite is used with the health received from the almanac. If the setting is different from **Auto**, the user defined health setting is used.

The Galileo system is still in its test phase.
For this reason, within productive GNSS services signals from Galileo satellites should either:

a) not be used at all
b) or only be used with default satellite health settings.

Default satellite health:
By default, the health of all satellites is set to "Auto". With this setting, only Galileo satellites which are marked as Healthy in the satellite almanac will be tracked.

User defined satellite health:
It is possible to force “Unhealthy” satellites to "Healthy". This will overwrite the "Unhealthy" setting from the satellite almanac. As a result the satellite will be tracked. However, this can lead to tracking or positioning issues as invalid data may be sent by “Unhealthy” satellites. It is also possible to force satellites which are in the almanac declared “Healthy” to “Unhealthy”.

Navigation data:
Galileo navigation data is logged in RINEX2 and RINEX3 sessions. It is also contained in LB2 (E) streams.

Related topics

GNSS management: Tracking General
GNSS management: Tracking GPS
GNSS management: Tracking GLONASS
GNSS management: Tracking BEIDOU
GNSS management: Tracking QZSS

GNSS management:Tracking BEIDOU

Background information

Tracking BeiDou options may be used to control which health settings are used for each BeiDou satellite tracked by the receiver.

Setting Descriptions

The table below describes the settings that can be configured on the Tracking BeiDou tab.

Field	Description
Satellite health	For each tracked satellite it is possible to set the health as **Auto**, **Healthy** or **Bad**. Use the drop down list to change the satellite health for all satellites to the same value.
Satellite	The PRN satellite number.
Health from almanac	Shows the health setting for this satellite as received from the broadcast navigation message. **NA**, is shown for satellites where no health information is available in the ephemeris.
User defined health	Shows the configured health setting for each satellite. Either **Auto**, **Healthy** or **Bad**. This field can be edited via the list box. If the setting is set to **Auto**, the satellite is used with the health received from the ephemeris. If the setting is different from **Auto**, the user defined health setting is used.

Related topics

GNSS management: Tracking General
GNSS management: Tracking GPS
GNSS management: Tracking GALILEO
GNSS management : Tracking GLONASS
GNSS management: Tracking QZSS

GNSS management: Tracking QZSS

Background information

Tracking QZSS options may be used to control which health settings are used for each QZSS satellite tracked by the receiver.

Setting Descriptions

The table below describes the settings that can be configured on the Tracking QZSS tab.

Field	Description
Satellite health	For each tracked satellite it is possible to set the health as **Auto**, **Healthy** or **Bad**. Use the drop down list to change the satellite health for all satellites to the same value.
Satellite	The PRN satellite number.
Health from almanac	Shows the health setting for this satellite as received from the broadcast navigation message. **NA**, is shown for satellites where no health information is available in the ephemeris.
User defined health	Shows the configured health setting for each satellite. Either **Auto**, **Healthy** or **Bad**. This field can be edited via the list box. If the setting is set to **Auto**, the satellite is used with the health received from the ephemeris. If the setting is different from **Auto**, the user defined health setting is used.

Related topics

GNSS management: Tracking General
GNSS management: Tracking GPS
GNSS management: Tracking GALILEO
GNSS management : Tracking GLONASS
GNSS management: Tracking BEIDOU

GNSS management: Data streams

GNSS management: Data streams overview

Tab	Description
GNSS management: Outgoing data stream	Configure outgoing real time, LB2 (Leica Binary), NMEA or BINEX messages from the receiver.
GNSS management: Incoming data streams	Configure incoming meteo and tilt data streams to the receiver.

GNSS management: Outgoing data stream

GNSS management: Outgoing data streams

Background Information

This page provides an overview of the configured outgoing data streams.
Configure outgoing real time, LB2 (Leica Binary), NMEA or BINEX messages from the receiver by pressing **Create new data stream** .

The maximum number of configured outgoing data streams is 22, 20 TCP/IP connections and 2 serial connection available.

Mozilla Firefox does not support the use of certain ports. Use a different internet browser if these ports need to be used. Ports blocked by default in Mozilla Firefox browser.

Setting Descriptions

The table below describes the fields in the Outgoing data streams tab.

Setting	Description
Icon	Data stream is active. Data stream is inactive. To activate or deactivate a data stream press the Activate icon.
Stream Type	The configured outgoing data type.
Type/Message	The configured outgoing message types.
Connection	The configured connection type.
Device	The configured device used for transmitting the outgoing data stream.
Port	The configured port on the receiver used for transmitting the outgoing data stream.
Delete	Press delete to permanently delete the data stream.
Edit data stream	Press to edit the data stream settings. The outgoing data stream wizard will open.
Create new data stream (copy)	Press to create a new data stream product based on the settings of an existing data stream.
Activate	The data stream is inactive. Click to start streaming data. The data stream is active. Click to stop streaming data.

Create new data stream	Upon pressing **Create a new data stream**, the Data stream wizard opens. The wizard is a tool that guides you through the following stages of an outgoing data stream configuration: • Streamed data types - real time, LB2 (Leica Binary), NMEA or BINEX • Message selection • Connection type and configuration • Activating the data stream

After installing the dual frequency option, the configured data streams must be restarted to enable both L1

and L2 streams.

Related topics

GNSS management: Data streams overview
GNSS management: Incoming data streams

Outgoing data stream wizard: Select data stream
Outgoing data stream wizard: Configure real time out data stream
Outgoing data stream wizard: Configure LB2 data stream
Outgoing data stream wizard: Configure NMEA data stream
Outgoing data stream wizard: Configure BINEX data stream
Outgoing data stream wizard: Connection
Outgoing data stream wizard: Configure TCP/IP server
Outgoing data stream wizard: Configure TCP/IP client
Outgoing data stream wizard: Configure NTRIP server (source)
Outgoing data stream wizard: Configure Serial port
Outgoing data stream wizard: Configure Radio
Outgoing data stream wizard: Configure GSM / Modem / CDMA - dial up
Outgoing data stream wizard: Summary

Configure a data stream step-by-step

Outgoing data stream wizard: Select data stream

Setting Descriptions

The table below describes the settings that can be configured on the Select data stream page.

Setting	Description
Data stream type	Select the data stream type. • Real time • LB2 • NMEA • BINEX

Press to continue to the next wizard step.

Press to cancel and return to GNSS management: Outgoing data stream.

Outgoing data stream wizard: Configure real time out data stream

Background Information

Real time output is used to configure output of real time correction messages for RTK and DGPS.

Setting Descriptions

Tables below describe the settings that can be configured on the Configure real time out data stream page.

Setting	Description
Version and message type	Select the message type and version.

Message type	Description
Leica	The proprietary Leica real time data format supporting GPS and GLONASS. This is the best format to use when working exclusively with Leica Viva rovers or other Leica rover units.
Leica 4G	Leica proprietary RT format supporting GPS (including L5), GLONASS and Galileo. This is the best format to use when working exclusively with Leica rover units which support all available GNSS signals.
CMR	Compacted formats used to broadcast data for third party receivers.
CMR+	Compacted formats used to broadcast data for third party receivers.

RTCM 2.x

RTCM 2.x (Type 1,2)	Differential and Delta Differential (Code) GPS corrections. Use for DGPS applications. An accuracy of 0.5-5m rms can be expected at the Rover. Additional messages sent: 3
RTCM 2.x (Type 2,9)	GPS Partial Correction Set and Delta Differential GPS Corrections. Use for DGPS applications. An accuracy of 0.5-5m rms can be expected at the Rover. Use this when a slow data link is being used in the presence of interference. Additional messages sent:3
RTCM 2.x (Type 18,19)	Uncorrected pseudorange and carrier phase measurement. Use for RTK operations where the ambiguities will be resolved at the Rover (RTK). An accuracy of around 1-5cm (rms) can be expected after successful ambiguity resolution. Additional messages sent: 3, 22, 23, 24
RTCM 2.x (Type 20,21)	RTK Carrier phase corrections and high-accuracy pseudo-range corrections. Use for RTK operations. There is negligible difference in the accuracy obtained using these messages as compared to messages 18 and 19. Additional messages sent: 3, 22, 23, 24
RTCM 2.x (Type 1,2,18,19)	Output of both Code corrections and uncorrected carrier phase data. Additional messages sent: 3, 22, 23, 24
RTCM 2.x (Type 1,2,20,21)	Output of both Code and carrier phase corrections. Additional messages sent: 3, 22, 23, 24

RTCM 3.x Reduced bandwidth compared to RTCM v2.x, support of Galileo and BeiDou.

RTCM 3.x GPS/ GLO compact	RTCM standard for correction transmission including message types 1003 & 1011. Higher efficiency than RTCM versions 2.x. Supports real time services with significantly reduced bandwidth. Additional messages sent:1006, 1008, 1013, 1033, 1230 (if Glonass is tracked).
RTCM 3.x GPS/ GLO compact & ephemeris	RTCM standard for correction transmission including message types 1003 & 1011, satellite ephemeris GPS data (1019) and GLONASS ephemeris data (1020). Additional messages sent:1006, 1008, 1013, 1033, 1230 (if Glonass is tracked).

RTCM 3.x GPS/ GLO extended	RTCM standard for correction transmission including message types 1004 & 1012. Higher efficiency than RTCM versions 2.x. Supports real time services with significantly reduced bandwidth. Additional messages sent:1006, 1008, 1013, 1033, 1230 (if Glonass is tracked).
RTCM 3.x GPS/ GLO extended & ephemeris	RTCM standard for correction transmission including message types 1004 & 1012, satellite ephemeris GPS data (1019) and GLONASS ephemeris data (1020). Additional messages sent:1006, 1008, 1013, 1033, 1230 (if Glonass is tracked).

RTCM 3.x MSM

RTCM 3.x MSM compact	Multiple GNSS (MSM3). Contains messages: 1073 (GPS), 1083 (Glonass), 1093 (Galileo), 1123 (BeiDou). Additional messages:1006, 1008, 1013, 1033, 1230 (if Glonass is tracked).
RTCM 3.x MSM compact & ephemeris	Multiple GNSS (MSM3). Contains messages: 1073 (GPS), 1083 (Glonass), 1093 (Galileo), 1123 (BeiDou), 1019 (GPS ephemeris), 1020 (Glonass ephemeris). Additional messages:1006, 1008, 1013, 1033, 1230 (if Glonass is tracked).
RTCM 3.x MSM extended	Multiple GNSS (MSM5). Contains messages: 1075 (GPS), 1085 (Glonass), 1095 (Galileo), 1125 (BeiDou). Additional messages:1006, 1008, 1013, 1033, 1230 (if Glonass is tracked).
RTCM 3.x MSM extended & ephemeris	Multiple GNSS (MSM5). Contains messages: 1075 (GPS), 1085 (Glonass), 1095 (Galileo), 1125 (BeiDou), 1019 (GPS ephemeris), 1020 (Glonass ephemeris). Additional messages:1006, 1008, 1013, 1033, 1230 (if Glonass is tracked).

For further information go to

- RTCM Messages Types
- Real time message formats

Reference station ID	Enter a reference station ID. The reference station ID is converted into a compact format and sent out with real time data in all real time data formats. It is different from the point ID of the reference station. The reference station ID is also required when working with several reference stations in time slicing mode on the same frequency. In this case, the ID of the reference station from which data is to be accepted from must be typed in at the rover.
End of message	Select **Nothing** or **CR** to add a carriage return at the end of the real time message.

Time slicing	Activate or deactivate time slicing. Select activate to delay the sending of the real time message. This is required when a real time message from different reference stations are sent on the same radio channel.
No. of reference stations	Only visible when Time slicing is checked. Select the number of reference stations in use from where real time messages are sent on the same radio channel.
Time slot	Select the time slot. This field is only visible when Time slicing is checked.

	The time slot represents the actual time delay. The number of possible time slots is the number of reference stations in use. The time delay equals 1 s divided by the total number of reference stations. If two reference stations are used, the time delay is 0.50 s. Therefore, the time slots are at 0.00 s and at 0.50 s. With three reference stations, the time delay is 0.33 s. The time slots are at 0.00, 0.33 and 0.66 s.

The following settings are dependent on the selected version and message type.

Data rate	Select the rate at which data will be sent.
Coordinate rate	Select the rate at which coordinates will be sent.
Info rate	Select the rate at which the Reference Station information, such as point ID will be sent.
Message xx rate	Enter the rate at which the selected messages will be sent out.
Message xx repeat	Enter the number of times the selected messages will be repeated.
Message 9nr. Satellites	The number of satellites to be included in message 9.

Press to go back to the previous wizard step. Press to continue to the next wizard step.

Press to cancel and return to GNSS management: Outgoing data stream.

Outgoing data stream wizard: Configure LB2 data stream

Background Information

LB2 is the Leica proprietary binary protocol to interface with the receiver. An outgoing LB2 stream can contain measurement data and/or satellite data.

Setting Descriptions

The table below describes the settings that can be configured on the Configure LB2 data stream page.

<table>
<tr><th>Setting</th><th>Description</th></tr>
<tr><td>Measurement data</td><td>
<table>
<tr><th>Step</th><th>Description</th></tr>
<tr><td>1</td><td>Activate to stream LB2 data raw code and phase data for all tracked satellites.</td></tr>
<tr><td>2</td><td>Select the message type to be sent out
• Message D: LB2 (D Message) supports GPS L1 and L2 and GLONASS L1 and L2 data.
• Message E: LB2 (E Message) additionally supports GPS L5, Galileo, BeiDou and QZSS signals and is more compact.</td></tr>
<tr><td>3</td><td>Select the rate to send the measurement data.</td></tr>
</table>
</td></tr>
<tr><td>Satellite data</td><td>Activate to stream satellite data and send out almanac/ephemeris data (GPS: 0x88, GLO: 0xD1, GAL: 0xD3, QZSS: 0xD6, BDS: 0xD7) immediately when new data is available.</td></tr>
</table>

Press to go back to the previous wizard step. Press to continue to the next wizard step.

Press to cancel and return to GNSS management: Outgoing data stream.

Outgoing data stream wizard: Configure NMEA data stream

Setting Descriptions

The table below describes the settings that can be configured on the Configure NMEA data stream page.

Setting	Description
Message	Activate or deactivate the NMEA message check boxes that are to be output. A detailed description of each NMEA message is contained in Appendix B: NMEA Messages.
Rate	Select the data rate for the NMEA messages.

The selected NMEA messages will be sent out immediately at the selected rate.

The position update rate of a high rate (>1 Hz) NMEA stream depends on:

- the data rate of an incoming correction data stream,
- the data rate of an outgoing data stream,
- the logging rate.

Select positioning mode "Network RTK" in order to have updated positions in a high rate NMEA stream also without e.g. having a high rate incoming data stream.

If different rates are configured for an NMEA stream and an incoming real-time stream, the rate of the NMEA stream will be restricted to the rate of the incoming real-time corrections. This applies to positioning modes "Reference Station" and "Monitoring" of the incoming data stream.
Select positioning mode "Network RTK" in order to have updated positions in a high rate NMEA stream also without e.g. having a high rate incoming data stream.

Press to go back to the previous wizard step. Press to continue to the next wizard step.

Press to cancel and return to GNSS management: Outgoing data stream.

Related Topics

Incoming data stream wizard: Configure real time in data stream

Outgoing data stream wizard: Configure BINEX data stream

Background Information

BINEX (Binary Exchange Format) is an exchange format for GNSS data defined by UNAVCO. You can find more information about BINEX at http://binex.unavco.org. The configuration wizard includes a check box table which enables and disables individual BINEX messages.

Setting Descriptions

The table below describes the settings that can be configured on the Configure BINEX data stream page.

Setting	Description

Message	The data rates may be specified for each of the following messages: • Meta data (0x00) • Navigation data (0x01) • Internal state (0x7D) • Ancillary site data (0x7E) • Observation data (0x7F)
Sub message	The following sub messages are sent out: • Meta data (0x00): none • Navigation data (0x01:) 0x01: decoded GPS ephemeris 0x02: decoded GLONASS ephemeris 0x03: decoded SBAS ephemeris 0x04 decoded GALILEO ephemeris • Internal state (0x7D): 0x00 • Ancillary site data (0x7E): 0x00 • Observation data (0x7F:) 0x05 and 0x04 or 0x03 and 0x04 Message 7F-05 must be used in order to stream BeiDou and/or QZSS observations.
Rate	Select the data rate for the BINEX messages. **When new data available:** The receiver will send the message whenever new data is available. e.g. whenever the receiver receives new ephemeris data for a certain satellite. This option is only available for BINEX 0x01 GNSS Navigation Information output control.

Press to go back to the previous wizard step. Press to continue to the next wizard step.

Press to cancel and return to GNSS management: Outgoing data stream.

Outgoing data stream wizard: Connection

Background Information

Data can be streamed from the receiver using a variety of communication types.

Setting Descriptions

The table below describes the settings that can be configured on the Connection page.

Setting	Description
Connection type	Select the connection type. TCP/IP server: The receiver works as a TCP server allowing TCP clients to connect to the receiver's ports to receive the data streams. TCP/IP client: This setting allows the receiver to act as a TCP client

	and send data out to a configured IP address and port. This way no port has to be opened in the firewall to allow clients to connect to the receiver. Furthermore since the data stream is now sent to a PC port, the number of connections to the data stream is not limited by the receiver.
NTRIP server (source)	This mode allows the receiver to act as Ntrip Server, and to provide data to an Ntrip Caster. In terms of TCP/IP, the Ntrip server mode is in fact a TCP client mode. As an Ntrip Server, the receiver connects to a caster and starts to stream data.
Serial port	The receiver streams data out of the physical serial port.
Radio	The receiver streams data using an attached radio.
GSM / Modem / CDMA - dial up	The receiver streams data using an attached GSM, Modem or CDMA dial up service.
Bluetooth	GR25/50: The receiver streams data via the Bluetooth serial port. This data stream can only be connected to if the Bluetooth device is activated in Receiver setup: Network connections, Bluetooth tab. tab.

Press to go back to the previous wizard step. Press to continue to the next wizard step.

Press to cancel and return to GNSS management: Outgoing data stream.

Outgoing data stream wizard: Configure TCP/IP server

Background Information

The receiver works as a TCP server allowing TCP clients to connect to the receiver's ports to receive the data streams.

Setting Descriptions

The table below describes the settings that can be configured on the Configure TCP/IP server page.

Setting	Description
TCP/IP port	Enter the TCP/IP port of the receiver.
Allow connections from	Specify the number of users that are allowed to connect to the data stream via TCP/IP. • Minimum of 1 user, maximum of 10 users. • This setting is only available for receivers with the GRL115, Multi-Client and Ntrip Caster option key loaded. For all other receivers the number of users is fixed to 1. The option can be purchased from Leica Geosystems.
Limit access range	Select the range of IP addresses, which are authorized to access the receiver. The valid IP range is from 1.0.0.0 to 223.255.255.255.

Press to go back to the previous wizard step. Press to continue to the next wizard step.

Press to cancel and return to GNSS management: Outgoing data stream.

Outgoing data stream wizard: Configure TCP/IP client

Background Information

The TCP/IP client connection setting allows the receiver to act as a TCP client and send data out to a configured IP address and port. This way no port has to be opened in the firewall to allow clients to connect to the receiver. Furthermore since the data stream is now sent to a PC port, the number of connections to the data stream is not limited by the receiver.

Setting Descriptions

The table below describes the settings that can be configured on the Configure TCP/IP client page.

Setting	Description
Server IP address	Enter the numeric IP address of the Server to connect to. The valid IP range is from 1.0.0.0 to 223.255.255.255.
TCP/IP port	Enter the TCP/IP port of the receiver.

Press to go back to the previous wizard step. Press to continue to the next wizard step.

Press to cancel and return to GNSS management: Outgoing data stream.

Outgoing data stream wizard: Configure Ntrip server (source)

Background Information

This mode allows the receiver to act as Ntrip Server, and to provide data to an Ntrip Caster.
In terms of TCP/IP, the Ntrip server mode is in fact a TCP client mode. As an Ntrip Server, the receiver connects to a caster and starts to stream data.

Setting Descriptions

The table below describes the settings that can be configured on the Configure Ntrip server (source) page.

Setting	Description
Use local caster	If the Ntrip caster on this receiver is active and mount points are defined, a data stream can be sent directly to this caster and distributed to Ntrip clients. Activating this check box will automatically set the correct settings for the local caster and provide a list of all the available mount points on the local Ntrip caster.
Ntrip caster IP address	The hostname or IP address of the Ntrip caster to connect to. The valid IP range is from 1.0.0.0 to 223.255.255.255.
TCP/IP port	Enter the TCP/IP port to connect to on the Ntrip caster.
Mount point	Enter the mount point. The mount point is the identifier of a data stream on an Ntrip Caster. It is needed to provide data to an Ntrip Caster.
Choose mount point	Only available when "Use local caster" is activated. It shows a list of all the mount points configured on the local Ntrip caster. A mount point can be selected and will then appear in the mount point field. The mount point name can be edited later. It is possible to enter a mount point name that is not yet defined on the local Ntrip caster. Store the data stream and define the mount point afterwards.

Password	Enter the source password. The source password, as configured for the selected mount point, is required to authenticate a stream sending data to the Ntrip caster.

Press to go back to the previous wizard step. Press to continue to the next wizard step.

Press to cancel and return to GNSS management: Outgoing data stream.

Ntrip server connections

- If an Ntrip server (source) connects to the Ntrip caster and tries to connect to a non-existing mount point, the Ntrip caster will return an “Invalid mount point” error message. If the Ntrip server (source) is a GR/GM receiver, it will try to reconnect every every 10s for 30 minutes.
- If an Ntrip server (source) connects to the Ntrip caster and tries to connect to a mount point that is already receiving data from another Ntrip server (source), the Ntrip caster will return a “Mount point taken” error message. If the Ntrip server (source) is a GR/GM receiver, it will try to reconnect every 10s for 30 minutes.
- If an Ntrip server (source) connects to the Ntrip caster and tries to connect to a mount point using a wrong password, the Ntrip caster will return an “Authentication failed” error message. If the Ntrip server (source) is a GR/GM receiver, it will not try any reconnects.
- If an Ntrip server (source) is connected to the Ntrip caster and no data is received from the source for more than 15 s, the Ntrip caster will disconnect the Ntrip server (source). This is necessary as it may happen that an Ntrip server (source) disconnection may not be done properly, leaving the Ntrip caster assuming that the connection is still available. If the Ntrip server (source) now tries to reconnect, a “mount point taken” message would be issues and the connection not be allowed. To prevent this, the connection is regularly checked for data transmission. Please make sure the data stream sent to the Ntrip caster has a rate higher than 15 s. If the connected Ntrip server (source) is a GR/GM receiver, it will continuously try to reconnect every 5 s.

Related Topics

Status: Ntrip caster

Ntrip caster: Overview

Ntrip caster: Caster tab

Ntrip caster: Mount points tab

Ntrip caster: Create new mount point

Ntrip

Outgoing data stream wizard: Configure Serial port

Background Information

This mode allows data to streamed out of the physical serial port.

This page allows you to change the settings of the instrument's serial port.

Do not select the connection type Serial Port if you have a radio/modem/phone connected to the physical serial port. In this case you must select the connection type Radio or GSM/Modem/CDMA - dialup. The serial port settings for these devices are configured in Receiver settings: Device Management.

Setting Descriptions

The table below describes the settings that can be configured on the Configure serial port page.

Setting	Description
Connected to	Only available on GR2550. Select the physical serial port for data transmission • Serial port 1 • Serial port 2 For the GR10/30 & GM10/30, Serial port 1 is configured automatically as there is only one serial port available.
Baud rate, Parity, Data bits, Stop bits	Select the port settings for the communication between the receiver and the serial port.
Flow control	Defines which kind of handshake is used. • None: No handshake. • RTS/CTS: Handshake in both directions.

Press to go back to the previous wizard step. Press to continue to the next wizard step.

Press to cancel and return to GNSS management: Outgoing data stream.

Outgoing data stream wizard: Configure Radio

Background Information

This mode allows data to be transmitted with an attached Radio device. The receiver supports eight different types of radios including seven which attach to the physical serial port via a serial cable and one which attaches to the Slot in port (P3).

Only the radios listed in the Receiver settings: Device Management page are supported.
The port settings for these radios are predefined and cannot be modified.

A radio must be attached before configuration of the data stream in order for the radio channel to be set. If the radio was detached after or while the data stream had been configured, the receiver must be rebooted for the radio to work again.

Radio channels can only be set if they are pre-configured on the attached device.

Setting Descriptions

The table below describes the settings that can be configured on the Configure radio page.

Setting	Description
Device	Select the radio device.
Channel	Enter the channel that will be used on the device.
Connected to	Only available on GR25/50. Select the physical serial port for data transmission • Serial port 1 • Serial port 2 For the GR10/30 & GM10/30, Serial port 1 is configured automatically as there is only one serial port available.

	For slot in devices, this field is not available, the slot-in port is selected automatically.

Press to go back to the previous wizard step. Press to continue to the next wizard step.

Press to cancel and return to GNSS management: Outgoing data stream.

Outgoing data stream wizard: Configure GSM / Modem / CDMA - dial up

Background Information

This mode allows data to be transmitted with an attached GSM, Modem or CDMA - dial up service device. There are a number of default devices defined in the Receiver settings: Device Management page.

The device settings can be edited in the Receiver settings: Device Management page.
New devices can be created in the Receiver settings: Device Management page by creating a copy of an existing device.

Only one dial up connection is supported. Make sure to delete existing dial up connections before adding a new one. Check page Status > Port Summary to see which dial up connections are configured.

Setting Descriptions

The table below describes the settings that can be configured on the Configure GSM / Modem / CDMA - dial up page.

Setting	Description
Device	Select the device name. Only devices defined in the Receiver settings: Device Management page are available for selection.
Pin code	Enter the pin code for the devices SIM card.
Puk code	The puk code is a security code for the SIM card for some devices. The puk codes needs to be entered when the pin code has been entered incorrectly more than three times. The puk will unblock the SIM card.
Connected to	Only available on the GR25/50. Select the physical serial port for data transmission • Serial port 1 • Serial port 2 For the GR10/30 & GM10/30, Serial port 1 is configured automatically as there is only one serial port available. For slot in devices, this field is not available, the slot-in port is selected automatically.

Press to go back to the previous wizard step. Press to continue to the next wizard step.

Press to cancel and return to GNSS management: Outgoing data stream.

Outgoing data stream wizard: Set streaming status

Setting Descriptions

The table below describes the settings that can be configured on the Set streaming status page.

Setting	Description
Activate data stream	Deactivate the data stream if you do not want it to run immediately.

Press to go back to the previous wizard step.

Press to cancel and return to GNSS management: Outgoing data stream.

GNSS management: Incoming data streams

GNSS management: Incoming data streams

Background Information

This page provides an overview of the configured incoming data streams.
Configure incoming meteo or tilt data or use an incoming real time data stream to monitor the receiver's position,

Create a new incoming data stream by pressing **Create new data stream** .

The maximum number of meteo, tilt and real time data streams is one of each type.

Mozillia Firefox does not support the use of certain ports. Use a different internet browser if these ports need to be used. Ports blocked by default in Mozilla Firefox browser.

An incoming real time data stream can only be activated if GPS and GLO tracking of L2C signals is disabled.
If you want to activate an incoming real time data stream make sure to first disable the tracking of GPS and GLO L2C signals.

For single site corrections, a fixed RTK solution is only available for baselines up to 80km. Beyond 80km a DGPS solution is provided.
Fixed RTK solutions for baselines longer than 80km are available when using Network Corrections.

Setting Descriptions

The table below describes the fields in the Incoming data streams tab.

Setting	Description
Icon	Data stream is active. Data stream is inactive. To activate or deactivate a data stream press the Activate icon.
Stream Type	The configured incoming correction data type.
Type/Message	The configured incoming message type.
Connection	The configured connection type, e.g TCP/IP or Ntrip.

Device	The configured device used for receiving the incoming data stream. This can be a network connection or a serial connection.
Port	The configured port on the receiver used for receiving the incoming data stream.
Data rate	The configured data rate for meteo and tilt data as it will be set on the external sensor.
Delete	Press delete to permanently delete the data stream.
Edit data stream	Press to edit the data steam settings. The incoming data stream wizard will open.
Activate	The data stream is inactive. Click to start receiving data.. The data stream is active. Click to stop receiving data..

Create new data stream	Upon pressing **Create a new data stream**, the Data stream wizard opens.
	
	The wizard is a tool that guide you through the following stages of an incoming data stream configuration:
	
	• Real time data stream:
	  • Received data types - real time, meteo or tilt data
	  • Message selection - RTCM2, RTCM3. Leica, Leica 4G or CMR/CMR+
	  • Connection type and configuration
	  • Activating the data stream
	
	• Meteo or Tilt data stream:
	  • Received data types - real time, meteo or tilt data
	  • Selection of meteo/tilt device and port used
	  • Activating the data stream

Related topics

Data streams: Overview
GNSS management: Incoming data streams

Incoming data stream wizard: Select data steam
Incoming data stream wizard: Configuration Meteo
Incoming data stream wizard: Configuration Tilt
Incoming data stream wizard: Configure real time in data stream
Incoming data stream wizard: Conneciton
Incoming data stream wizard: Configure TCP/IP server
Incoming data stream wizard: Configure TCP/IP client
Incoming data stream wizard: Configure Ntrip client
Incoming data stream wizard: Serial port
Incoming data stream wizard: Summary

Incoming data stream wizard: Select data stream

Setting Descriptions

The table below describes the settings that can be configured on the Select data stream page.

Setting	Description
Data stream type	Select the incoming data stream type. • Meteo • Tilt • Real time

Press to continue to the next wizard step.

Press to cancel and return to GNSS management: Incoming data streams.

Incoming data stream wizard: Configure Meteo

Background Information

Meteorological sensors are used for measuring air pressure, temperature and relative humidity. The data from the meteo sensor is logged together with the GPS raw observations into the MDB and RINEX files. If RINEX logging is active, an additional meteo RINEX file is created that contains the data from the meteo sensor.

Data is logged into the same file as the GPS raw observations (MDB) or into a file with the same file name but with the extension m (RINEX). No data is logged, unless raw observation logging is configured and a logging session is started.

Setting Descriptions

The table below describes the settings that can be configured on the Configure Meteo device page.

Setting	Description
Device	Select from the list box all available meteo sensors available on the receiver.
Data rate	Select the rate at which data is requested from the meteo sensor.
Connected to	Only available on the GR25/50. Select the physical serial port for data transmission • Serial port 1 • Serial port 2 For the GR10/30 & GM10/30, Serial port 1 is configured automatically as there is only one serial port available.
Temperature	Select to display and log the dry temperature in degrees Celsius.
Pressure	Select to display and log the pressure in mbar.
Relative Humidity	Select to display and log the relative humidity as a percentage.
Wind azimuth	Select to display and log the wind azimuth (deg) from the direction that the wind blows.
Wind speed	Select to display and log the wind speed in meters per second (m/s).
Rain Increment	Select to display and log the rain accumulation since last measurement (mm).
Hail indicator	Select to display and log the hail detected since last measurement in hits per square centimetre.

The following default settings are used for communication between the Meteo device and receiver. They cannot be edited.

Met3, Met3A, Met4A default communication settings

Communication setting	Default setting
Port name	Serial Port (P1).
Baud rate	9600
Parity	Even
Data bits	8
Stop bit	1
Flow control	No handshake. The handshake used between the receiver and the tilt device.

Vaisala PTU300 default communication settings

Communication setting	Default setting
Port name	Serial Port (P1).
Baud rate	4800
Parity	Even
Data bits	7
Stop bit	1
Flow control	No handshake. The handshake used between the receiver and the tilt device.

Vaisala WXT520 default communication settings

Communication setting	Default setting
Port name	Serial Port (P1).
Baud rate	19200
Parity	None
Data bits	8
Stop bit	1
Flow control	No handshake. The handshake used between the receiver and the tilt device.

Press to go back to the previous wizard step. Press to continue to the next wizard step.

Press to cancel and return to GNSS management: Incoming data streams.

Related Topics

MET RINEX Observational Types

Incoming data stream wizard: Configure Tilt

Background Information

Tilt devices (such as the Leica NIVEL210) are used for measuring inclinations. The data from the tilt device is logged together with the GPS raw observations into MDB files. When logging RINEX files, the tilt data is written into a special auxiliary file.

No tilt data is logged unless a logging session is configured in GNSS management: Logging sessions and the incoming data stream is active.

Setting Descriptions

The settings on this screen define the input port and parameters for incoming tilt device measurements.

Setting	Description
Device	Select the device. The Leica NIVEL210, the Measurement Specialities D-Series NS-XX/DMG2 and the Applied Geomechanics MD900-T are the only tilt devices supported by the GR/GM receiver. The XX in the name of the device “DSeries NS-XX/DMG2” is a place holder for different versions corresponding to the measuring range of the tilt device. Currently, versions with 5°/15°/30° measuring range are available. The different versions use the same interface and can now all be used together with RefWorx. The out of range values for the MD900-T tilt sensor are reported as the maximum angular range measured by the sensor.
Data rate	Select the rate at which data is requested from the tilt device.
Connected to	Only available on the GR25/50. Select the physical serial port for data transmission • Serial port 1 • Serial port 2 For the GR10/30 & GM10/30, Serial port 1 is configured automatically as there is only one serial port available.

The following default settings are used for communication between the Tilt device and receiver. They cannot be edited.

NIVEL210 default communication settings

Communication setting	Default setting
Port name	Serial Port (P1).
Baud rate	9600
Parity	None
Data bits	8
Stop bit	1
Flow control	No handshake. The handshake used between the receiver and the tilt device.

D-Series NS-XX/DMG2 default communication settings

Communication setting	Default setting
Port name	Serial Port (P1).
Baud rate	9600
Parity	Even
Data bits	8
Stop bit	1
Flow control	No handshake. The handshake used between the receiver and the tilt device.

The D-Series tilt sensor must be configured to use 9600 Baud, otherwise the GR/GM receiver will not be

able to connect to the tilt sensor.

Applied Geomechanics MD900-T default communication settings

Communication setting	Default setting
Port name	Serial Port (P1).
Baud rate	9600
Parity	None
Data bits	8
Stop bit	1
Flow control	No handshake. The handshake used between the receiver and the tilt device.

Press to go back to the previous wizard step. Press to continue to the next wizard step.

Press to cancel and return to GNSS management: Incoming data streams.

Incoming data stream wizard: Configure real time in data stream

Background Information

This page is used to configure the receiving of real time correction messages for RTK and DGPS positioning.

Incoming real time streams can be used to calculate a fixed or DGPS position.

The calculated position can be streamed via an NMEA data stream and external applications such as Leica SpiderQC or Leica GeoMoS can
be used to monitor the antenna movement and automatically generate alarms in case predefined thresholds are exceeded.

Three positioning modes are available:

Positioning mode	Description
Reference Station	This mode is designed for monitoring the stability of the antenna position of a reference station. It is optimized for long baselines as used within RTK networks. Movements will be detected with a high reliability while the positioning results are smoothed to prevent outliers from triggering false alarms.
Monitoring	In this mode the position calculation is optimized for monitoring applications with short baselines. Positioning results are less smoothed than in Reference Station mode as outliers are less likely. Therefore, a position change may be detected slightly faster than in Reference Station mode.
Network RTK	In this mode the position calculation will behave as on a real rover.

Receiving and sending RTK data works simultaneously for **Reference Station** and **Monitoring** mode.
In **Network RTK** mode, it is recommended to disable all outgoing real time data streams.

Depending on the length of the baseline, the accuracy of the position solution will vary. This means that with longer baselines the reliability of detecting movements decreases.

If single site corrections are available only from distant sites, it is recommended to use network corrections

like MAX or i-MAX rather than single site corrections to improve the accuracy of the position calculation and the reliability of detecting movements.

In order to obtain a fixed position, the following options are required:

- GRL114 Site Monitor
- GRL119 Dual Frequency for GR10/25 and GM10
- GRL200 Multi-Frequency for GR30/50 and GM30

Without these options only DGPS positions can be obtained.

Using SBAS for DGPS does not require any option. However, all incoming data streams must be deleted if SBAS should be used for the position calculation.

For activating an incoming Real time data stream, L2C tracking must be disabled for GPS and GLO.

Setting Descriptions

The table below describes the settings that can be configured on the Configure real time in data stream page.

Setting	Description
Version and message type	Select the message type and version.

Message Type	Description
Leica	Leica proprietary real time data format supporting GPS and GLONASS. This is the best format to use when working exclusively with Leica reference station units.
Leica 4G	Leica proprietary real time data format supporting GPS (including L5), GLONASS and Galileo. This is the best format to use when working exclusively with Leica reference station units that support all available GNSS signals.
CMR	Compacted format used when receiving correction data from third part receivers.
CMR+	Compacted formation used when receiving correction data from third party receivers.
RTCM 2.x (Type 1,2)	Differential and Delta Differential (Code) GPS corrections. Used to achieve a DGPS position.
RTCM 2.x (Type 2,9)	GPS Partial Correction Set and Delta Differential GPS Corrections. Used to achieve a DPGS position. Used when a slow data link is n use or interference is expected.
RTCM 2.x (Type 18,19)	Uncorrected pseudo range and carrier phase measurement. Used for achieving an RTK position. Ambiguities will need to be resolved at the GR/GM receiver.
RTCM 2.x (Type 20, 21)	RTK Carrier phase corrections and high-accuracy pseudo range correction. Used for achieving an RTK position, There is negligible difference in the accuracy obtained using these messages as compared to message 18 and 19.

RTCM 3.x	RTCM standard for correction transmission including message types 1002 & 1011 or message types 1004 & 1012. Higher efficiency that RTCM versions 2.x. Supports real time services with significantly reduce bandwidth.

With the Site Monitor option installed, all above message types are available.
This means that DGPS positions (based on differential code) and fixed positions (phase fixed position) can be achieved.
Otherwise only RTCM2.x (Type 1,2) and RTCM2.x (Type 9,2) are available allowing DGPS position calculation.

For further information go to:
RTCM Message Types
Real time message formats

Reference Sensor

Enter the receiver type of the reference station receiver the corrections are received from. This is important when using a reference station receiver from a different manufacturer as it allows the correct application of GLONASS inter frequency biases.
The reference sensor and the associated GLONASS inter frequency biases will be defined in the following way:

1. User defined (as set in web interface)
2. RTCM Message 1230 (if contained in the incoming real-time data stream)
3. RTCM Message 1033 (if contained in the incoming real-time data stream)
4. Automatic (compute biases based on the data contained in the incoming real-time data stream).

Reference Antenna

Enter the antenna type attached to the reference station receiver the corrections are received from so phase centre corrections can be applied accordingly

In most cases it is sufficient to use the setting "Automatic", as most correction streams contain the reference antenna type.
If that is not the case the correct reference antenna type must be selected.

Note that a vertical offset (height difference between marker and ARP) of a user selected reference antenna will not be applied, e.g. 0.36m offset for a tripod setup

This means that if a tripod setup is used on the reference receiver, this antenna setup must be configured on the reference receiver. On the rover the reference antenna type should then be set to "Automatic".

Receive RTK corrections from RTK Network

If network corrections are received, select the type of RTK network corrections to be received so ionospheric and tropospheric modelling will be used for position calculation accordingly.

Correction Type	Description
None	No RTK Network is selected.
Nearest	This term applies to a network real time product supplied from the reference station that is closest to the rover coordinate transmitted.
i-MAX	The product sends interpolated phase corrections (ionospheric and geometric) to the rover. These phase corrections are generated from an automatic or fixed cell

		according to the rover position sent previously. Therefore, the generation of the i-MAX format requires a position of the rover sent to the network.
	MAX	The product sends observations of the Master corrected by the network processing, and correction differences of all the Auxiliaries to the rover. The rover must interpolate the network corrections (master and auxiliary)to get the best solutions for its location. This product is best suited to broadcast transmission. The MAX format is based on RTCM v3.1 standard format.
	VRS	The product sends interpolated corrections (ionospheric and geometric) to the rover. These corrections are generated from an automatic or fixed cell according to the rover position sent previously. Therefore, the generation of the Virtual RS format requires a position of the rover to be sent to the network. The end user has no information about error/correction sizes.
	FKP	FKP stands for "Flächen-Korrektur-Parameter" (Area correction parameter). FKP is a means of representing the distance-dependent errors affecting an entire network region, in a non-standard but published open message for all to understand. The product sends interpolated corrections (ionospheric and geometric) to the rover. This product is best suited to broadcast transmission. This product would be used whe you have an old rover that cannot support the MAX format. The end user can have information about error/correction sizes.
	If a RTK network is selected (anything other than None), then NMEA GGA messages (using the calculated position) will be automatically sent from the receiver to the RTK server every 5 seconds. For example: $GNGGA,130334.80,4724.5416858,N,00937.0529382,E,1,14,0.7,469.765,M,,,,*hh<CR><LF> $GPGGA,130334.80,4724.5416858,N,00937.0529382,E,1,09,0.7,469.765,M,,,,*hh<CR><LF> $GLGGA,130334.80,4724.5416858,N,00937.0529382,E,1,05,0.7,469.765,M,,,,*hh<CR><LF>	
Send user ID	Enable the sending of NMEA GPUID authentication details if necessary for user authentication with the RTK correction provider.	
User ID 1 and User ID 2	Enter the users IDs. User ID i must be entered when the check box is enables. User ID 2 is optional.	

Configure position calculation	Description

<table>
<tr><td>Position type</td><td>Select the position type to be used
<table>
<tr><th>Position type</th><th>Description</th></tr>
<tr><td>Reference Station</td><td>For detecting antenna movements using long baselines.</td></tr>
<tr><td>Monitoring</td><td>For monitoring applications using short baselines.</td></tr>
<tr><td>Network RTK</td><td>For rover-like position calculation.</td></tr>
</table></td></tr>
<tr><td>Max. position quality</td><td>The following position quality levels are available:
<table>
<tr><th>Position quality</th><th>Site monitor option</th></tr>
<tr><td>RTK fixed position</td><td>available</td></tr>
<tr><td>Differential code (DGPS position)</td><td>not available</td></tr>
</table></td></tr>
</table>

Press to go back to the previous wizard step. Press to continue to the next wizard step.

Press to cancel and return to GNSS management: Incoming data streams.

Related Topics

Incoming data stream wizard: Connection

Incoming data stream wizard: Connection

Background Information

Data can be received by the receiver using a variety of communication types.

Setting Descriptions

The table below describes the settings that can be configured on the Connection page.

<table>
<tr><th>Setting</th><th>Description</th></tr>
<tr><td>Connection type</td><td>Select the connection type.
<table>
<tr><td>TCP/IP server</td><td>The receiver works as a TCP server allowing TCP clients to connect to the receiver's ports to transmit the data streams to the GR/GM receiver.</td></tr>
<tr><td>TCP/IP client</td><td>This setting allows the receiver to act as a TCP client and connect to a configured IP address and port to receive data.</td></tr>
<tr><td>NTRIP client</td><td>This mode allows the receiver to act as an NTrip Client and receive data from an Ntrip Caster. The receiver initiates that connection to the Ntrip Caster and may need to send authentication information.
A source table can be downloaded to allow selecting a mount point to connect to.</td></tr>
<tr><td>Serial port</td><td>The receiver receives data via the physical serial port.</td></tr>
</table></td></tr>
</table>

Press to go back to the previous wizard step. Press to continue to the next wizard step.

Press to cancel and return to GNSS management: Incoming data streams.

Incoming data stream wizard: Configure TCP/IP server

Background Information

The receiver works as a TCP server allowing TCP clients to connect to the receiver's ports and transmit the data streams to the GR/GM receiver.

Setting Descriptions

The table below describes the settings that can be configured on the Configure TCP/IP server page.

Setting	Description
TCP/IP port	Enter the TCP/IP port of the receiver.
Limit access range	Select the range of IP addresses that are authorised to access the receiver. The valid IP range is from 1.0.0.0 to 223.255.255.255.

Press to go back to the previous wizard step. Press to continue to the next wizard step.

Press to cancel and return to GNSS management: Incoming data streams.

Incoming data stream wizard: Configure TCP/IP client

Background Information

The TCP/IP client connection setting allows the receiver to act as a TCP/IP client and connect to a configured IP address and port to receiver data.

Setting Descriptions

The table below describes the settings that can be configured on the Configure TCP/IP client page.

Setting	Description
TCP/IP server address	Enter the numeric IP address or the hostname of the Server to connect to. The valid IP range is from 1.0.0.0 to 223.255.255.255.
TCP/IP port	Enter the TCP/IP port to connect to on the TCP/IP server to receiver data.

Press to go back to the previous wizard step. Press to continue to the next wizard step.

Press to cancel and return to GNSS management: Incoming data streams.

Incoming data stream wizard: Configure Ntrip client

Background Information

This mode allows the receiver to act as an Ntrip client, connect to an Ntrip Caster and receiver correction data.

Setting Descriptions

The table below describes the settings that can be configured on the Configure Ntrip client page.

Setting	Description
Ntrip caster address	The hostname or IP address of the Ntrip caster to connect to. The valid IP range is from 1.0.0.0 to 223.255.255.255.
TCP/IP port	Enter the TCP/IP port open on the Ntrip Caster for clients to connect to. The default Ntrip Caster port number is 2101.
Mount point	Enter the mount point from which the data is to be received. The mount point is the identifier of a data stream on an Ntrip Caster. A list of all the available mount points running on an Ntrip caster can be requested via the source table icon. User authentication may be needed to connect to a mount point.
Source table	The source table is empty until the **Get source table** icon is used. If the connection to the Ntrip caster is successful, the drop down list can be opened and lists all the available mount points on the configured Ntrip caster. If a mount point is selected from the list, it will automatically appear in the mount point input field. Or enter the mount point manually.
User name	Enter the user name for authentication on the configured mount point. For some mount points authentication is not needed. In these cases, the fields can be left blank.
Password	Enter the password for authentication on the configured mount point. For some mount points authentication is not needed. In these cases, the fields can be left blank.

Press to go back to the previous wizard step. Press to continue to the next wizard step.

Press to cancel and return to GNSS management: Incoming data streams.

Ntrip client connections

- If an Ntrip client connects to the Ntrip caster and tries to connect to a non-existing mount point or a mount point that does exist but is currently not receiving any data from an Ntrip server (source), the Ntrip caster will return an “Invalid mount point” error message. If the Ntrip client is a GR/GM receiver, it will continuously try to reconnect every 5 s.
- If an Ntrip client connects to the Ntrip caster and tries to connect to a mount point using a wrong user name or password, the Ntrip caster will return an “Authentication failed” error message. If the Ntrip client is a GR/GM receiver, it will try to reconnect every 5 s for 30 s.
- If a GR/GM receiver Ntrip client is connected to the Ntrip caster and no data is received from the Ntrip caster for more than 15 s, the Ntrip client will assume that the connection is not valid anymore. This is necessary as it may happen that the connection from the Ntrip caster to the Ntrip client may be interrupted, leaving the Ntrip client assuming that the connection is still available. Please make sure the data rate connected to the Ntrip caster is higher than 15 s. If the connected Ntrip client is a GR/GM receiver, it will continuously try to reconnect every 5 s.

Related Topics

Status: Ntrip caster

Ntrip caster: Overview

Ntrip caster: Caster tab

Ntrip caster: Mount points tab

Ntrip

Incoming data stream wizard: Configure Serial port

Background Information

This mode allows the receiver to receive data on a physical serial port.
This page allows the user to change the settings on the instrument's serial port.

Setting Descriptions

The table below describes the settings that can be configured on the Configure serial port page.

Setting	Description
Connected to	Only available on GR25/50. Select the physical serial port for data transmission • Serial port 1 • Serial port 2 For the GR10/30 & GM10/30, Serial port 1 is configured automatically as there is only one serial port available.
Baud rate, Parity, Data bits, Stop bits	Select the port settings for the communication between the receiver and the serial port.
Flow control	Defines which kind of handshake is used. • None: No handshake. • RTS/CTS: Handshake in both directions.

Press to go back to the previous wizard step. Press to continue to the next wizard step.

Press to cancel and return to GNSS management: Incoming data streams.

Incoming data stream wizard: Set streaming status

Background Information

An incoming real time data stream can only be activated if GPS and GLO tracking of L2C signals is disabled.
If you want to activate an incoming real time data stream make sure to first disable the tracking of GPS and GLO L2C signals.

Setting Descriptions

The table below describes the settings that can be configured on the Set streaming status page.

Setting	Description
Activate data stream	Deactivate the data stream if you do not want it to run immediately.

Press to store the data stream configuration.

Press to go back to the previous wizard step.

Press to cancel and return to GNSS management: Incoming data stream.

Related topics

Data streams: Overview
GNSS management: Incoming data streams

GNSS management: Logging sessions

GNSS management: Logging sessions overview

Tab	Description
GNSS management: Logging sessions	Configure, create or edit a logging session.
GNSS management: Smart clean-up	Enable and disable the smart clean-up of logging session files on the receiver.

GNSS management: Logging sessions

Background Information

Logging sessions are used to log observations in the data file type MDB, RINEX or Compact RINEX (Hatanaka) for later use in post processing.

- A logging session must be active in order to begin logging.
- All files can be directly imported into Leica Geo Office (LGO). All MDB and RINEX files can also be downloaded via GNSS Spider.
- If you wish to push the logging session data to an FTP server, an FTP location needs to be configured before starting the logging session wizard. An FTP location is configured via the menu option GNSS management / FTP locations. An FTP location contains the information needed to access an external FTP server, such as server name, user name and password.
- An SD card must be inserted in the receiver to log data. The SD card can run full if the logging session data files are not removed (e.g. by autodelete or FTP push). Activate the **Smart clean-up** functionality to ensure that the SD card will not run full.

Field Descriptions

The table below describes the fields in the Sessions tab.

Field	Description
Icon	Session is active. Session is inactive. To activate or deactivate a session press the Activate icon.
Name	The configured logging session name. Click the logging session name to view additional properties. Use this functionality to quickly check the configuration of the logging session.
Data type	The configured data type: MDB, RINEX V2.11, V3.01 or V3.02, HATANAKA.or NMEA.

Session priority	The configured session priority which determines the Smart clean-up tasks. When Smart clean-up is active and the SD card is running full, data from low priority sessions is deleted first, high priority sessions are preserved as long as possible. When Smart clean-up is off, this setting has no influence. Go to GNSS management / Logging sessions / Smart clean-up tab for further information and to enable the Smart clean-up functionality.

Delete	Press delete to permanently delete the logging session. **Note: This will delete all corresponding files from the SD card. It cannot be undone!**
Edit logging session	Press to edit the logging session settings. The Logging session wizard will open. The Session name cannot be edited.
Create new logging session (copy)	Press to create a new logging session based on the settings of an existing logging session.
Activate	The logging session is deactivated. Press to activate. The logging session is activated. Press to deactivate.

Create new Logging session	Press to open the Create new Logging session wizard. The logging session wizard is explained in detail below.

Logging session properties

The table below describes the additional logging session properties that are shown when the logging session **Name** is selected.

Field	Description
Session name	The configured logging session name.
Data type	The configured data type.
Session priority	The configured session priority which determines the Smart clean-up tasks. Go to GNSS management / Logging sessions / Smart clean-up tab for further information and to enable the Smart clean-up functionality.
Session type	The configured session type, either **continuous** or **timed**. **Timed** allows specific logging intervals to be defined.
Logging rate	The configured rate at which the observations are logged.
Length of file	The configured file length. The file length defines how long data is written to one file before a new file is created.
Log Doppler observations	Indicates if logging doppler observations file is activated (yes) or deactivated (no) in the logging session.
Log SNR values	Indicates if logging SNR values in the RINEX file is activated (yes) or deactivate (no) in the logging session.
Store data to	Clicking on the SD card link opens an FTP connection to the folder on the SD card where the data for this logging session is stored. This is only possible when the FTP server access is enabled. To enable FTP server access, go to Receiver Setup / FTP server. The FTP access to the SD card may not work in all

	browsers. Set the FTP server access restrictions to allow anonymous access to ensure SD card access via the browser link. Go to Receiver Setup / FTP server.
Auto delete	Shows when the logging session files are automatically deleted. The SD card can run full when Auto delete is set to **Never**.
Archive to	Indicates if the logging session is archived to an external USB drive. If a USB drive is configured, clicking on the **USB drive link** opens an FTP connection to the folder on the USB device where the data for this logging session is stored. Some browsers have limitations concerning their FTP capabilities. Please use a dedicated FTP client in case you experience problems while accessing files via FTP.
Archive to FTP location	Indicates if the logging session data is archived to an FTP location.
Latest file	The file name of the last file that this logging session was written to. For RINEX and Hatanaka logging sessions it will always list the observation file name (e.g. *.15o).

Logging session wizard

Upon pressing Create a new Logging session, the Logging session wizard opens.

The wizard is a tool that guides the user through the following stages of a logging session configuration:

- Logging session name, data types, priority and session type
- Session timing
- Logging rates, file lengths, included observations
- Data handling configuration
- Logging session activation

Related topics

GNSS management: Smart clean-up

Logging session wizard: Create a new logging session
Logging session wizard: Session timing
Logging session wizard: MDB
Logging session wizard: RINEX
Logging session wizard: Compact RINEX
Logging session wizard: NMEA
Logging session wizard: Data handling
Logging session wizard: Summary

GNSS management: Smart clean-up

Background Information

The SD card in the receiver can run full if the logging session data files are not removed (e.g. by FTP push or download). **Smart clean-up** ensures that the SD card will not run full, while preserving the data that has the highest priority to the user.
Smart clean-up functionality differs from **auto delete files**. **Auto delete files** is time dependant, whilst **Smart clean-up** is dependent on the free storage space on the SD card. **Smart clean-up** allows the available SD card space to be used up completely without the risk of losing important data.

Smart clean-up will delete files from both active and inactive logging sessions.

Setting Descriptions

The table below describes the fields in the Smart clean up tab.

Setting	Description
Enable Smart clean-up	• **Active** When the SD card is almost completely filled by logging session data, the **Smart clean-up** will first delete the oldest files with the lowest priority to create space for new files. (Note: The logging session priority is configured via the first logging session wizard page, Create a new logging session). Once all data from low priority session is deleted, the receiver will stop logging data for low priority logging sessions if the SD card continues to fill up. Next, medium priority session will be deleted and the receiver will stop logging medium priority sessions. Once only high priority sessions remain active, logging will run in a loop. Only high priority data will be logged and the oldest files are deleted as soon as necessary. This ensures that there is always space available for the latest high priority data. Activate **Smart clean-up** to always log the most recent and highest priority logging session data. • **Inactive** All running logging sessions will continue logging as configured, until the SD card is full. All logging sessions will then stop logging data. Leave this setting unchecked if you don't want to lose old data and are unaffected by the possibility of all logging sessions stopping due to a full SD card. Press to save any setting changes.

Click here to view the Smart clean up flow chart

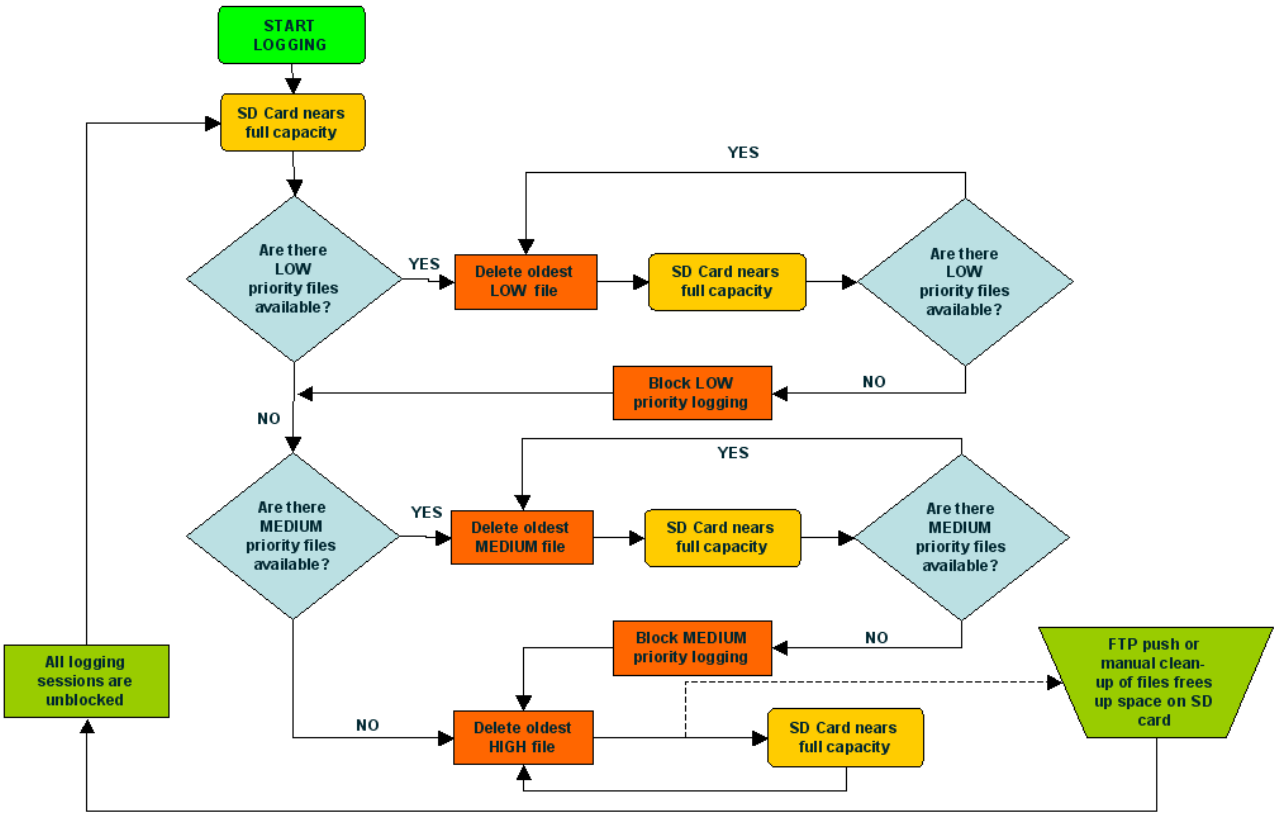

Related topics

GNSS management: Logging sessions

Create new Logging session - Logging session wizard

Logging session wizard: Create a new logging session / Edit a logging session

Setting Descriptions

The table below describes the settings that can be configured on the Create/Edit a logging session page.

Setting	Description
Session name	Enter a unique logging session name. • Maximum number of characters allowed is 20. • Only certain **ASCII characters** are allowed. 0123456789 ABCDEFGHIJKLMNOPQRSTUVWXYZ abcdefghijklmnopqrstuvwxyz • No spaces/blanks are allowed, however underscore (_) can be used. • The session name is used in the folder structure when storing log files.
Data type	Select the data type that shall be written. • MDB

	• RINEX • Compact RINEX (Hatanaka) • NMEA
Session priority	Select the priority level to be used for **Smart clean-up** of the SD card, either high, medium or low. If **Smart clean-up** is activated then the session priority will determine which logging sessions are stopped / saved if the SD card is nearing full capacity. Read the topic GNSS management: Smart clean-up, for further information on the **Smart clean-up** functionality .
Session type	Select the session type, either continuous or timed. • **Timed:** Allows specific times to be configured for the session to log data, including duration, repetition interval and the number of intervals. Selecting timed will open an additional wizard step, Session timing. **Do not change a logging session created by Leica GNSS Spider into a timed logging session. Spider cannot configure timed logging sessions.** • **Continuous:** Select to define the data type file length only. If a continuous session type is activated, it will start logging immediately. To stop logging, manually deactivate the session via the **GNSS management: Logging sessions** menu option.

Press to continue to the next wizard step.

Press to cancel and return to GNSS management: Logging session.

Related topics

Logging sessions: Overview
GNSS management: Logging sessions
GNSS management: Smart clean-up

Logging session wizard: Session timing

Background information

Timed logging sessions consider the configured file length and the configured interval length.

Example: If a timed logging session is configured to

- Start logging at a certain date at 15:00h
- End logging after 30min
- No of repeats: repeat 10 times
- Start next session: 10min after last session ended
- And the file length is set to 1h, the behaviour will be as follows:

1. The receiver starts logging at 15:00h because the first interval starts.
2. The receiver stops logging and closes the file at 15:30h because the first interval ends.
3. The receiver starts logging into a new file at 15:40h because the second interval starts.
4. The receiver closes this file at 15:59:59h and immediately starts a new file because of the 1h file rollover.
5. The receiver stops logging and closes this file at 16:10h because the second interval ends.

Setting Descriptions

The table below describes the settings that can be configured on the Session timing page.

Please note that the time settings will refer to the receivers defined **Time zone**. To set the receivers **Time zone**, go to GNSS management / Site name and coordinates.

Setting	Description
Start logging at	Configure the start time and date of the logging session. Use the date and time pickers to select the logging start time.
End logging	Configure the end time and date or the duration of the logging session. End logging • **at:** Select a time and date for the first logging interval to end. • **after:** Select a time interval after which the first logging interval ends. • **no end:** The logging session starts at the defined date and time, and runs continuously. The minimum time interval for a logging session to run is 5 minutes.
No. of intervals	Configure the number of repeats for the current logging session. This setting is only available if **End logging** is set to **at** or **after**. Select • Select **run** to enter a number of repetitions for this logging session. • Select **repeat infinitely** to configure a logging session with no defined end. • Select **run once** to configure only one interval for a logging session.
Start next session	This setting is only active if **repeat infinitely** or **run** is selected in the **No. of repeats**. Configure the time for the next session to start as the number of days, hours and minutes after the last session ended. Note: The gap between logging sessions only has an impact if it is repeated at least once. The length of the gap must not be more than 20 days 23:55 h.
Create a wake up session	Activate to create a wake-up session with the same timing settings as this logging session. When the check box is activated and the logging session is stored, a wake-up session with the same name is created. This wake-up session has the same time and repeat settings as the logging session. After the logging session is stored and the wake-up session is created, both can be edited and deleted independently. The logging session will continue to run without the wake-up session if the receiver is turned on. The wake-up session will run without the logging session if the logging session was deactivated.

Press to go back to the previous wizard step. Press to continue to the next wizard step.

Press to cancel and return to GNSS management: Logging session.

Related topics

GNSS management / Site name and coordinates

Logging session wizard: MDB

Setting Descriptions

The table below describes the settings that can be configured on the MDB page.

Setting	Description
Logging rate	Select the rate at which the observations are to be logged. **Note:** a faster logging rate results in higher resource consumption on the receiver.
Length of file	Choose a value from 5 minutes to 24 hours. The file length defines how long data is written to one file before a new file is created.
Dynamics	Raw data for the MDB logging session can be logged in static or moving (kinematic) mode.
Log doppler observations	Activate or deactivate logging doppler observations to the MDB file.

When changing the logging rate of a high rate logging session, the session must first be deactivated. After changing the rate the session can be reactivated and will then use the new rate.
Example: A 20 Hz MDB logging session should be changed into a 50 Hz MDB session.

Press to go back to the previous wizard step. Press to continue to the next wizard step.

Press to cancel and return to GNSS management: Logging session.

Logging session wizard: RINEX

Setting Descriptions

The table below describes the settings that can be configured on the RINEX page.

Setting	Description
Logging rate	Select the rate at which the observations are to be logged. **Note:** A faster logging rate results in higher resource consumption on the receiver.
Length of file	Choose a value from 5 minutes to 24 hours. The file length defines how long data is written to one file before a new file is created.
Dynamics	Raw data for the RINEX logging session can be logged in static or moving (kinematic) mode.
Operator	Enter the name of the operator that is to appear in the RINEX file header. • Maximum number of characters allowed is 20. • Only certain **ASCII characters** are allowed. 0123456789 ABCDEFGHIJKLMNOPQRSTUVWXYZ

	abcdefghijklmnopqrstuvwxyz - _ and a "space" are allowed. • If left empty, the field in the RINEX header will be left blank.
Agency	Enter the name of the agency that is to appear in the RINEX file header. • Maximum number of characters allowed is 40. • Only certain **ASCII characters** are allowed. 0123456789 ABCDEFGHIJKLMNOPQRSTUVWXYZ abcdefghijklmnopqrstuvwxyz - _ and a "space" are allowed. • If left empty, the field in the RINEX header will be left blank.
Include SNR values	Activate to include the (unmapped) SNR observations in the RINEX file.
Log doppler observations	Activate to include the doppler observations in the RINEX file.
Mixed navigation file	Activate to write a single navigation file for all tracked satellite systems instead of writing separate navigation files for each satellite system.

When changing the logging rate of a high rate logging session, the session must first be deactivated. After changing the rate the session can be reactivated and will then use the new rate.
Example: A 20 Hz MDB logging session should be changed into a 50 Hz MDB session.

Press to go back to the previous wizard step. Press to continue to the next wizard step.

Press to cancel and return to GNSS management: Logging session.

Logging session wizard: Compact RINEX (Hatanaka)

Setting Descriptions

The table below describes the settings that can be configured on the Compact RINEX (Hatanaka) page.

Setting	Description
Logging rate	Select the rate at which the observations are to be logged. **Note:** A faster logging rate results in higher resource consumption on the receiver.
Length of file	Choose a value from 5 minutes to 24 hours. The file length defines how long data is written to one file before a new file is created.
Dynamics	Raw data for the Compact RINEX logging session can be logged in static or moving (kinematic) mode.
Operator	Enter the name of the operator that is to appear in the RINEX file header. • Maximum number of characters allowed is 20. • Only certain **ASCII characters** are allowed. 0123456789 ABCDEFGHIJKLMNOPQRSTUVWXYZ abcdefghijklmnopqrstuvwxyz - _ and a "space" are allowed. • If left empty, the field in the RINEX header will be left blank.

Agency	Enter the name of the agency that is to appear in the RINEX file header. • Maximum number of characters allowed is 40. • Only certain **ASCII characters** are allowed. 0123456789 ABCDEFGHIJKLMNOPQRSTUVWXYZ abcdefghijklmnopqrstuvwxyz - _ and a "space" are allowed. • If left empty, the field in the RINEX header will be left blank.
Include SNR values	Activate to include the (unmapped) SNR observations in the Compact RINEX file.
Log doppler observations	Activate to include the doppler observations in the Compact RINEX file.

Press to go back to the previous wizard step. Press to continue to the next wizard step.

Press to cancel and return to GNSS management: Logging session.

Logging session wizard: NMEA

Setting Descriptions

The table below describes the settings that can be configured on the NMEA page.

Setting	Description
Logging rate	Select the rate at which the observations are to be logged. **Note:** A faster logging rate results in higher resource consumption on the receiver.
Length of file	Choose a value from 5 minutes to 24 hours. The file length defines how long data is written to one file before a new file is created.
Message	Select the NMEA message to include in the logged file.

NMEA log file handling:

- A new file will be created when the session is activated.
- Writing to a file will be stopped when the logging session is deactivated.
- A new file will be created when the reference position is changed.
- A new file will be created after the user length of file duration is reached.
- A new file will be created after reboot or restart of the receiver.
- Writing to a file will be stopped when the user disables the Velocity & Displacement Engine.
- No file will be created if the Velocity & Displacement Engine is disabled and the logging session is activated.
- A new file will be created when the user enables the Velocity & Displacement Engine and the logging session is already activated.

When changing the logging rate of a high rate logging session, the session must first be deactivated. After changing the rate the session can be reactivated and will then use the new rate.
Example: A 20 Hz MDB logging session should be changed into a 50 Hz MDB session.

Press to go back to the previous wizard step. Press to continue to the next wizard step.

Press to cancel and return to GNSS management: Logging session.

Logging session wizard: Data handling

Setting Descriptions

The table below describes the settings that can be configured on the Data handling page.

Setting	Description
Zip files	Activate to ZIP the logging session files.
Directory naming convention	Select the directory naming convention. This is the folder structure that will be used on the SD card, on the FTP server (when FTP push is used) and on the external USB device (if USB push is used) to store the logging files.
Archive to USB drive **(GR25/50 only)**	Activate to push data to the external USB drive. This can be configured and activated even if no external USB drive has been connected yet. This way the logging session can be configured prior to the actual use of the receiver. It also allows swapping of the USB drive without having to deactivate the logging session first. Files archived to the external USB drive are not included in the auto-delete or Smart clean-up routines.
Choose FTP location	Select a location to archive the logging session data to. This list contains all FTP locations configured in **Receiver setup / FTP locations**. If an FTP location has not been configured prior to creating the logging session, finish creating the current logging session and then create the FTP push location. Via the logging session Edit functionality, assign the FTP push location. An FTP location contains all information such as server name, user name and password, needed to access an FTP server.
Delete files	Select from the list box when or if the logging session files should be automatically deleted. The SD card can run full when **Delete files** is set to Never.

Press to go back to the previous wizard step. Press to continue to the next wizard step.

Press to cancel and return to GNSS management: Logging session.

Logging session wizard: Set logging status

Setting Descriptions

The table below describes the settings that can be configured on the Set logging status page.

Setting	Description
Activate session	Deactivate the logging session if you do not want it to run immediately.

Press to go back to the previous wizard step.

Press to save the logging session.

Press to cancel and return to GNSS management: Logging session.

GNSS management: FTP and USB locations

GNSS management: FTP push

Background Information

FTP locations configuration allows the user to

- Add new FTP locations
- Edit and delete FTP locations
- View information about existing FTP locations

FTP locations are used to push data created by a logging session on the receiver to an external FTP server. Each FTP location can be used in several logging sessions. An unlimited number of FTP push locations can be created.

An FTP location needs to be configured in order to push a logging session (data) to an FTP server. An FTP location contains the data needed to access an FTP server, such as server name, user name and password. When an FTP location is assigned to a logging session, the logged data from this session is automatically pushed onto an FTP server.
This functionality is only available for GR/GM receivers with the FTP push option installed.

Different directory naming conventions can be used

- to store logged data onto the SD card and
- to push data to an FTP server.

In other words, the directory naming convention selected for the FTP push applies only to the FTP push, not to the way the logged files are stored on the SD card (and vice versa).

If the FTP push fails, e.g. because the connection to an FTP server cannot be established, then an event message will be issued and the file will internally be marked as "pending for FTP push". At the next scheduled time of FTP push, e.g. the following full hour in case of hourly sessions, the FTP push of all pending files will be attempted again. Check the column **Queue** to find out if any files are pending.

Setting Descriptions

The table below describes the fields in the FTP locations overview page.

Settings	Description
Icon	The icon is shown when the FTP push location is used in a logging session. FTP push locations showing this icon cannot be deleted.
Name	The configured name of the FTP location. Click the FTP location name to view additional properties. Use this functionality to quickly check the configuration of the FTP location.
FTP server	The configured hostname of the FTP server (IP or URL).
Queue	The total number of files queued to be pushed to the configured FTP server. This number is zero unless a problem occurs when trying to connect to the FTP server.

	Files in the queue are pushed as soon as the FTP server is accessible again. If the queue number keeps increasing, check the FTP location settings. Use the edit icon to access the Edit FTP locations page and use the Test FTP locations link to test the settings. Files deleted from the queue will not be automatically pushed to the FTP server.
Clear	Press to clear the queue of pending files to be pushed to an FTP location. This deletes a backlog of files caused by for example, FTP server unavailability. • The Clear icon is only shown when the Queue number is greater than zero. • Files deleted from the queue will not be automatically pushed to the FTP server.
Delete	Press to permanently delete the selected FTP location. Note: FTP locations that are currently in use cannot be deleted.
Edit FTP location	Press to edit the selected FTP location.
Create new FTP location (copy)	Press to create a new FTP location based on the settings of an already existing location.

Create new FTP location	Press to create a new FTP location.

FTP location properties

The table below describes the content of the FTP location pop-up box that is displayed when clicking on the underlined FTP location name.

Properties	Description
Name	The configured name of the FTP location.
FTP server host	The configured FTP server hostname (IP or URL).
FTP server port	The configured TCP/IP server port of the FTP server
FTP root directory	The configured FTP root directory.
Directory naming convention for FTP push	The directory naming convention used for FTP push. This can be a different one than the one to store logged files onto the SD card.
Username	The configured username which is used to connect to the FTP server.
In use	Indicates if the FTP location is used in a logging session.
Use passive mode	Indicates if **Use passive mode** is activated for the selected FTP location.

Related topics

Receiver setup: New FTP location

GNSS management: External USB drive

Background Information

External USB drive configuration allows the user to

- View the number of files queuing to be pushed to the external USB drive
- Delete the queue of files to be pushed

The external USB drive is used to push data created by a logging session on the receiver to an external USB drive. The USB drives can be swapped while logging is active. If a USB drive is not connected while the file push is attempted, the number of files in the queue will show how many files could not be pushed to the USB drive.

When the external USB drive is assigned to a logging session, the logged data from this session is automatically pushed to the USB drive.

Setting Descriptions

The table below describes the fields in the External USB drive overview page.

Settings	Description
Icon	The icon is shown when an external USB drive is detected on the receiver. If the icon is shown, no drive was detected and no data can be pushed.
Name	External USB drive, cannot be edited.
Queue	The total number of files queued to be pushed to the external USB drive. This number is zero unless a problem occurs when trying to push the files. Files in the queue are pushed as soon as the USB drive is accessible again. If the queue number keeps increasing, check the USB drive is connected properly. Files deleted from the queue will not be automatically pushed to the USB drive.
Clear	Press to clear the queue of pending files to be pushed to the connected USB drive. This deletes a backlog of files caused by for example, USB drive unavailability. • The Clear icon is only shown when the Queue number is greater than zero. • Files deleted from the queue will not be automatically pushed to the USB drive.

FAT32 format should not be used for memory devices bigger than 32GB.

The GR25 supports the use of FAT16/FAT32/ExFAT devices. NTFS devices are not supported. Formatting of NTFS devices is possible. The disk format will be changed to ExFAT.

External hard disks that comply with USB 2.0 specifications (do not use more than 500 mA at any time) can be powered by the GR25 receiver.

Please make sure the USB hard drive used with the GR25 complies with this specification. If a USB hard disk is used that does not comply with this specification, it is highly recommended to self-power the hard disk

when used with the GR25 receiver.

External memory sticks are powered by the GR25.

When the external USB drive is formatted by the receiver, the exFAT file system is used. Note that Windows XP does not support this file system, and will not read the drive without an additional update, which is available here:
http://www.microsoft.com/download/en/details.aspx?id=19364

GNSS management: New / Edit FTP location

Background Information

Enter the necessary access information for pushing logged data from the GR/GM receivers SD card to an external FTP server.

Setting Descriptions

The table below describes the fields in the New / Edit FTP location page.

Setting	Description
Name	Enter a unique FTP location name. The maximum number of characters is 60.
FTP server host	Enter the server name or IP-address of the FTP server. The maximum number of characters if 250.
FTP server port	Enter the TCP/IP server port of the FTP server. The default value is 21.
FTP root directory	Enter an optional FTP root directory. This field can be left blank. If entered, this directory has to exist on the FTP server. It will not be created automatically during the FTP push.
Directory naming convention for FTP push	The directory naming convention used for FTP push. This can be a different one than the one to store logged files onto the SD card.
Username	Enter a valid username to access the FTP server account.
Password	Enter the password of the FTP server account.
Send commands	Add a custom FTP protocol command which is executed directly after login. This field can be left blank.
Use passive mode	Activate or deactivate using the passive mode. Using the passive mode is recommended as it improves communication robustness.

Test FTP location	Press to test read and write access to the FTP location. Depending on the FTP server setup, this test may take several minutes. Check the event log for results.

FTP retry:

If the receiver is not able to FTP push a data file to the remote FTP server at the scheduled time, this file will be listed in the FTP push queue for this FTP location and a message will be displayed in the event log.

The receiver will then try at periodic intervals to push all files that have not yet been pushed successfully (new and queued).

If the FTP push was successful, a message is displayed in the event log and the FTP push queue number is updated.

GNSS management: Antenna management

GNSS management: Antenna Management overview

Tab	Description
Select antenna	Select an antenna and enter the height reading and measurement type.
Antenna management	Upload new antenna files, create new antennas and restore antenna default values.

GNSS management: Select antenna

Background information

Select the antenna currently connected to the receiver and enter the height reading and measurement type.

Correctly specifying the antenna and related information is critical for high accuracy positioning.

Changing the antenna type and/or antenna height interrupts logging and streaming. If any of these settings are changed when a logging session is active, then the current files will be finalized and new file(s) will start to be logged.

Field Descriptions

The table below describes the fields in the Select antenna tab.
Calculate the antenna height reading contains detailed information for the Height reading and Measurement type.

Field	Description
Antenna	From the list box select the antenna to be used with the receiver. The list contains all default and user defined antennas. Go to Antenna management to upload a new antenna file or manually define a new antenna.
Height reading	Enter the antenna height reading.
Measurement type	The antenna height reading must be measured as true vertical height.

Related topics

GNSS management: Antenna management
Create/Edit and Antenna
GNSS Management: Calculate the antenna height reading

GNSS management: Antenna management

Background information

Upload new antenna files, create new antennas and restore antenna default values.

Field Descriptions

The table below describes the fields in the Antenna management tab.

Field	Description
Loadable antenna files	The name of the antenna file. All antenna files loaded onto the SD card are shown.
Location	The location of the antenna file.
Delete	Select to delete the antenna file.
Install	Select to install the antenna file.
Upload new antenna file	Select to upload a new LIST.ANT antenna file exported previously from LGO from the computer to the receiver. The File upload page will open.

Installed antennas	All antennas currently configured on the receiver are listed.
Type	Shows the antenna type. Default antennas are available in the factory default settings. User defined antennas have been added manually.
Delete	Press **Delete** to permanently delete the antenna. The **ADVULLANTENNA** cannot be deleted.
Edit antenna	Press to edit the antenna settings. The Edit antenna page will open. The antenna name cannot be edited. The **ADVULLANTENNA** cannot be edited.
Create new antenna (copy)	Create a new antenna based on the settings of an existing antenna.

Create new antenna	Press to create a new antenna. The Create antenna page will open.
Restore default values	Restore the default antenna settings. This will restore all default antennas with the factory default settings. User defined antennas will not be deleted. The restore default button fills all fields with the default values and stores these values. Pressing the save button is not necessary. When accepting the confirmation message, all settings on this page are overwritten with the default settings.

Related topics

File upload
Create/Edit and Antenna
GNSS management: Select antenna

GNSS management: Create/Edit an Antenna

Field Descriptions

The table below describes the fields in the Create/Edit an Antenna tab.

Field	Description
Name	The antenna name. When editing an existing antenna, the antenna name cannot be changed.
Horizontal offset	Horizontal distance from the physical reference point (ARP) to the point on the antenna where the slope height reading is measured. If you are using vertical height readings (Height Hook) this value may be 0. See also GNSS Management: Calculate the antenna height reading.
Vertical offset	Vertical distance from the ARP to the point where the height reading is measured to. If you are using slope height readings to a point above the physical reference plane this value must be negative. See also GNSS Management: Calculate the antenna height reading.
L1 phase offset **L2 phase offset**	The L1 and L2 phase offset values.
IGS name	The IGS name for the antenna.
Serial number	The antenna serial number.

Related topics

GNSS management: Antenna management
GNSS management: Select antenna
GNSS Management: Calculate the antenna height reading

GNSS management: Calculate the antenna height reading

The pictures below show examples for a standard setup of a Leica AT504/AT504 GG antenna on a pillar and a tripod. They also illustrate the antenna height reading values and give an example of what a permanent antenna setup could look like.

The Tripod setup illustrates the two different ways the height of the antenna can be measured. On the left the height is determined by measuring the slope distance to an offset point on the antenna. On the right the height is measured by using a height hook.

Pillar setup	Tripod setup
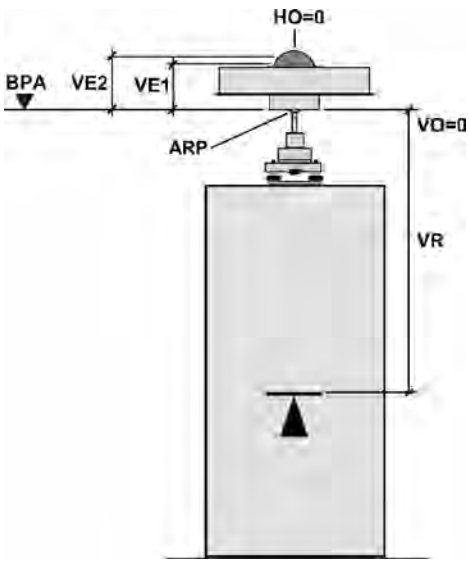	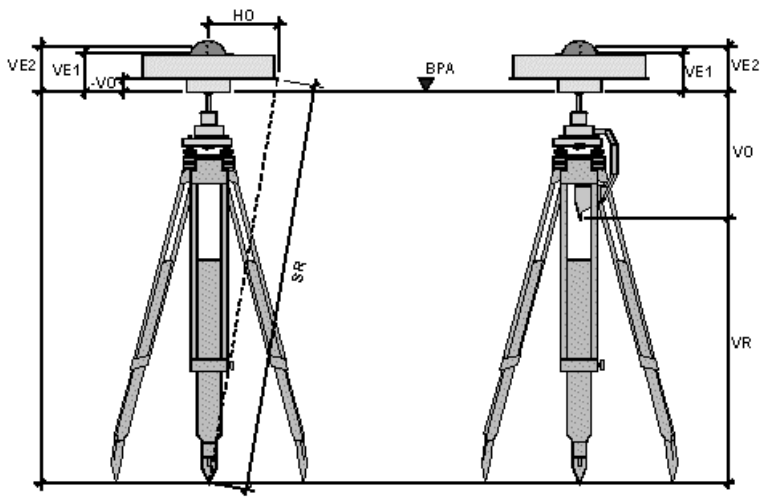

HO	=	Horizontal Offset
VO	=	Vertical Offset
VR	=	Vertical Height Reading
VE1	=	Vertical Phase Center Offset for L1
VE2	=	Vertical Phase Center Offset for L2
BPA	=	Physical Reference Plane (bottom of pre-amplifier)
ARP	=	Antenna Reference Point. Intersection of the BPA horizontal plane and the vertical symmetry axis.
SR	=	Slope Height Reading

Slope measurement type

$$\text{Antenna Height} = \sqrt{SR^2 - HO^2} \pm VO$$

Note: If the Offset Point on the antenna is above the Physical Reference Plane BPA, the Vertical Offset VO is negative!

Vertical measurement type

Antenna Height = VR + VO

Receiver setup: PPS and Event In

Background Information

PPS

PPS stands for pulse per second. If configured, the receiver sends out an electric pulse at a specified interval time. This can be used e.g. to activate another device. The pulse is sent out via the dedicated PPS port. For further information go to Ports & Pins Assignments: GR25.

Event Input

Event input is possible via serial port 2. The event input interface allows for the detection of pulses which are sent from external devices connected to the receiver. The pulses can be recorded in the receiver and then later can be superimposed on the processed kinematic data. The positions where the events took place can be interpolated in LGO.
Events logged during real time operation can also be exported to an ASCII file using an appropriate format file.

Setting Descriptions

PPS output	Description
Enable PPS output	Check to activate the output of a periodic pulse, uncheck to deactivate.
PPS rate	Select the rate at which pulses are to be output. Ranges from 0.05s to 20.0s.
Polarity	Select to output a pulse starting with a rising or a falling edge. Rising edge: Generates a normally low, active high pulse with the rising edge as the reference. Falling edge: Generates a normally high, active low pulse with the falling edge as the reference.

Event In	Description
Info to log	Activates the detection and logging of events being received on serial port 2.

Polarity	Select the polarity to use the rising or falling edge of the incoming pulse as trigger in order to record an event.
Bias internal	Accepts **Default** or **User** defined calibration values for the particular receiver.
Internal bias	Available if **Bias internal** is set to **User**. Sets the calibration value in nanoseconds for the receiver.
External bias	Sets a calibration value in nanoseconds according to the external event device and cable being used.
Time guard	If two or more events take place during the time defined in seconds, the first event will be recorded. Enter 0 to accept all events. The shortest recording time is 0.05 s.
Description	User input. Records up to 80 characters of data with the event record. This field can be left blank.

GNSS management: Wake-up sessions

GNSS management: Wake-up sessions

Background Information

GNSS management setup: Wake-up sessions allows the user to

- Configure new wake-up sessions.
- Edit and delete existing wake-up sessions.
- View information about existing wake-up sessions.

Wake-up sessions define a number of intervals for which the receiver is configured to run. The receiver turns itself on at the configured start time and starts e.g. logging and streaming as configured in GNSS management:: Logging session and GNSS management: Data streams. After the configured duration, the receiver stops all activities and automatically shuts down. This is especially useful in field campaigns where only a limited power supply is available.

- Up to twenty wake-up sessions can be configured.
- The maximum time between 2 consecutive start times is 21 days.
- More than one wake-up session may be active at a time. If at least one session is active any programmed power down requested by another session will be omitted.
- If the time between wake-up session is set to zero, the receiver will not power down.

Wake-up sessions can be configured in two ways, using

- Receiver setup: Wake-up sessions, or via the
- Logging session wizard. See GNSS management: Logging session for further information.

The time settings will refer to the receivers defined **Time zone**. To set the receivers **Time zone**, go to GNSS management / Site name and coordinates.

When the receiver is powered down, remote communication with the receiver will be lost. If you have no wake-up session configured, you will not be able to remotely restart the receiver.

Note the following behaviour for a wake-up session

- If an active wake-up session is configured, the receiver will power down at the end of the first interval, independent of whether the receiver had been on or off before the start of the interval.
- Once the receiver is powered down, no remote communication is possible until the next interval.
- If a power loss occurs during a wake-up session interval (when the receiver is on) and the power

comes back between intervals (when the receiver is supposed to be off), the receiver will boot and stay on until the end of the next interval.

- If a power loss occurs between intervals (when the receiver is off) and power comes back after the configured boot time, the receiver will stay on and power down at the end of the interval.
- During a wake-up session all data streams and logging sessions that had been configured and activated before the start of the wake-up session will automatically resume streaming and logging. Additional data streams and logging sessions can be configured during the intervals.
- The receiver starts booting 2 minutes before the configured time to ensure that the software is fully started by the configured start time.
- The receiver powers down 1-30 seconds after the configured time. Logging files may not be finalised before the receiver is powered down. These files will be finalized when the receiver boots the next time.
- After the last interval of a wake-up session has ended, the receiver is powered down and stays off. Remote access is not possible after the power down.

Setting Descriptions

The table below describes the fields in the Wake-up sessions page.

Settings	Description
Icon	Wake-up session is active and running. Wake-up session is inactive or the last wake-up interval has ended. Wake-up session is active but is currently not running.
Name	The configured name of the wake-up session. If a wake-up session was configured when creating a logging session, the name shown will be the logging session name.
Next start time	The time the receiver is configured to wake up next.
Next end time	The time the receiver is configured to power down next.
Remaining interv.	Number of remaining repetitions of the wake-up session.
Delete	Press delete to permanently delete the corresponding wake-up session.
Edit wake-up session	Press to edit the wake-up session.
Create new wake-up session (copy)	Press to create a new wake-up session based on the existing wake-up session.
Activate	The wake-up session is deactivated. Press to activate. The wake-up session is activated. Press to deactivate.

Create new wake-up session	Press to create a new wake-up session.

Wake-up session properties

The table below describes the content of the Wake-up session properties pop up box. Press on the underlined Wake-up session name to open the pop-up box.

Properties	Description
Name	The configured name of the wake-up session.

Session start	The start time and date of the first wake-up interval of this session.
Session end	The calculated power down time and date of the last interval of this wake-up session. • Select **at** to enter a specific power down time. • Select **after** to enter the interval length. • Select **No end** to configure an infinite wake-up session.
No. of intervals	The total number of repeats for the session.
Time between intervals	The time between power down of one interval and the power up of the next interval.
Interval length	The length of one wake-up interval.

Related topics

GNSS management: New/Edit wake-up session
GNSS management / Site name and coordinates

How to configure a Wake-up session

GNSS management: New/Edit wake-up session

Setting Descriptions

The table below describes the fields in the New/Edit wake-up session page. This page opens when creating a new Wake-up session with the Create new wake-up session button.

Setting	Description
Name	Enter a unique name for the wake-up session. If the Wake-up session is created from a logging session, the default name is derived from the logging session name. • Maximum number of characters allowed is 20. • Only certain **ASCII characters** are allowed. 0123456789 ABCDEFGHIJKLMNOPQRSTUVWXYZ abcdefghijklmnopqrstuvwxyz • Spaces/blanks, as well as underscore (_) are allowed. • The wake-up name cannot be edited, once a session has been created.
Wake-up at	The date and time for the receiver to boot for the first time with this Wake-up session.
Power down	The date and time for the receiver to power down after the first wake up interval. • **After:** Define the length of the wake up interval. • **At:** Define the end time and date for the first wake up interval. • **No end:** The receiver will not power down automatically after the wake-up session has started.
No. of intervals	The total number of repeats for the wake-up session. • Select **run** to enter a number of repetitions for this wake-up session. • Select **repeat infinitely** to configure a wake-up session with no defined end.

	• Select **run once** to configure only one interval for a wake-up session.
Start next session	Only shown when **No. of intervals** is set to **run** or **repeat infinitely**. Define the time between power down of one interval and the power up of the next interval. The maximum time between 2 consecutive start times is 21 days.
Activate Wake-up session	Activate this check box to activate the wake-up session.

Save the settings by pressing . This will redirect to the Wake-up session overview page where all configured wake-up sessions are listed.

Related topics

GNSS management: Wake-up sessions
GNSS management / Site name and coordinates

GNSS management: Velocity & Displacement Engine

Background Information

Leica VADASE also referred to as Velocity & Displacement Engine (V&DE) allows detecting velocities and displacements of the receiver's antenna position on the order of some cm/s and cm, respectively, without the need of using any kind of real time correction streams or services. If enabled, the estimated velocities and displacements can be streamed or logged using two new NMEA-type messages referred to as **Leica Geosystems velocity measurement – LVM** and **Leica Geosystems displacement measurement – LDM** message. In addition, while the V&DE is enabled, for each detected displacement, the start time, end time and total amount of displacement during this period will be reported in the Event log messages.

The Velocity & Displacement Engine requires an accurate (≈ cm) receiver reference position for precise velocity and displacement calculations.

The Velocity & Displacement Engine cannot be used in parallel with an activated incoming real time data stream.

To enable the Velocity & Displacement Engine the "GRL 124 Velocity & Displacement Engine" license option is required.

The idea behind the Leica Velocity & Displacement Engine relates to the research of the University of Rome "La Sapienza" Geodesy and Geomatics division and is known as the "Variometric Approach for Displacement Analysis Standalone Engine (VADASE)" and is subject to a patent. This is to estimate in real-time and in the global reference frame the three dimensional (3D) displacement that a single GNSS receiver undergoes within 2 consecutive epochs. This displacement, if divided by the interval between the 2 consecutive epochs, is equal to the (mean) velocity over the interval itself: as such, the "variometric" approach uses the GNSS receiver as a velocimeter. Multiple tests performed on synthetic and real data attest that VADASE is capable of detecting velocities higher or equal than 1 cm/s in the horizontal components and 2 cm/s in the vertical component. As a further step, provided that continuous data have been acquired, the time series of the estimated 3D velocities can be integrated over a certain interval to retrieve the dynamic movements (waveforms) of the receiver in a global reference frame.

The algorithm is based upon a so called "variometric" solution that requires the observations collected by a unique, stand-alone GNSS receiver and the standard GNSS broadcast products (orbits and clocks), which are ancillary information routinely available in real-time as a part of the broadcast satellites navigation message.

Note: The VADASE algorithm has been developed to detect fast short-term displacements. If a displacement has been detected and it continues for more than five minutes, it is recommended to subdivide the time of displacement and only consider time windows of five minutes each when analysing the detected long-term displacement and the corresponding velocities.

Setting Descriptions

The table below describes the settings that can be configured:

Velocity & Displacement Engine	Description
Enable Engine	Check to enable the Velocity & Displacement Engine, uncheck to disable. If the check box is ticked, two additional sections are available: • Current thresholds used for displacement detection The currently used velocity thresholds for detecting displacements in North, East, and Up components. These default thresholds can be changed. Use the "Save changes" button on top of the page to apply the new thresholds and restart the Velocity & Displacement Engine. • Computed thresholds The computed velocity thresholds within or after the 24 hour threshold computation process. **Note**: The tracking conditions and thus the velocity noise level can vary significantly from one site to another. Many factors can affect the velocity noise level, e.g. satellites geometry, multipath, obstructions, and nearby sources of radio interference. Therefore, it is recommended to verify the default velocity thresholds by running a 24 hour calibration process. As a result, velocity thresholds based on observations collected on the specific site will be computed taking the changing satellite constellation during a full day into account. These site-specific thresholds should be taken over to replace the default thresholds if local conditions lead to a different noise level of the estimated velocities. If the computed velocity thresholds are higher than the default velocity thresholds, using the computed velocity thresholds will lead to a lower probability of false displacement detections compared to using the default velocity thresholds.

Current thresholds used for displacement detection	Description
Threshold East	Currently used velocity threshold in East direction
Threshold North	Currently used velocity threshold in North direction
Threshold Up	Currently used velocity threshold in Up direction

Computed thresholds	Description
Threshold East	Computed site-specific velocity threshold in East direction
Threshold North	Computed site-specific velocity threshold in North direction
Threshold Up	Computed site-specific velocity threshold in Up direction
Time remaining	Time left until computation process of proposed velocity thresholds will be finished
Time missing (data gaps)	Accumulated time of data gaps (time when no GNSS signals were tracked and/or no position could be calculated). This parameter can be used to assess if tracking and positioning was normal and the computed thresholds can be used to replace the default velocity thresholds. In case of long data gaps, the reason of the gaps (e.g. double check antenna connection, check for radio interference sources) should be removed and the threshold computation should be restarted. **Hint**: If during the threshold computation process a long data gap occurs, the calibration process can be restarted at any time using the "Reset calibration" button.

Hint: All values in the computed thresholds table will be updated during the 24 hour runtime of the threshold computation process.

Button	Description

Get computed thresholds	Takes computed North / East / Up velocity thresholds from table “Computed thresholds” and copies them into “Current thresholds used for displacement detection” table. This can be done during the 24 hour calibration period or after it has finished. Note: Use the “Save changes” button in order to apply the new thresholds and restart the Velocity & Displacement Engine.
Reset calibration	Resets the velocity threshold computation process and restarts the Velocity & Displacement Engine.
Restore default values	Restores the default values: • Velocity & Displacement Engine is disabled. • If restarted, the default velocity thresholds will be used.

Workflow

The following steps should be followed in order to calibrate the Velocity & Displacement Engine before starting to use the GR receiver on a new site for displacement detection:

- Access the web interface page **GNSS management > Velocity & Displacement Engine**.
- Enable the Velocity & Displacement Engine by ticking the **Enable Engine** check box.
- Use the **Save changes** button to start the velocity threshold computation process.
- Wait 24 hours until the velocity threshold computation has finished.
- Go back to the web interface page **GNSS management > Velocity & Displacement Engine**.
- Compare the computed velocity thresholds with the default thresholds. Take over the computed threshold values if they are different than the default thresholds. To do this there are two options:
    - Use the **Get computed thresholds** button
    - Enter the computed values (or other values) into the fields in table **Current thresholds used for displacement detection**
- Apply the new velocity thresholds by using the **Save changes** button. This will also restart the Velocity & Displacement Engine.

Event log messages

The following event log messages will appear when the state of the Velocity & Displacement Engine is changed:

Event log message	Description	Message level
Velocity & Displacement Engine started	Velocity & Displacement Engine has been enabled	Info
Velocity & Displacement Engine stopped	Velocity & Displacement Engine has been disabled.	Info
Velocity & Displacement Engine: threshold computation started	When threshold computation period of 24 h has started	Info
Velocity & Displacement Engine: threshold computation finished	When threshold computation period of 24 h has finished	Info
Displacement engine reset (Change of reference position)	Velocity & Displacement Engine has been reset.	Warning
Start of displacement detected	Start of displacement has been detected.	Warning
End of displacement detected. Displacement (E/N/U): %s/%s/%s. Data completeness: %s.	End of displacement has been detected. Calculated displacement is reported to the user.	Warning

Receiver setup

Receiver Setup: Overview

Configure all receiver related settings such as network connections, FTP push locations and the user management. Or use the tools to upgrade the receiver firmware, add new option keys or switch to your preferred language.

Menu option	Description
Network Connections	• Configure the receiver IP and DNS settings to allow access via the Internet. • Selected devices such as mobile phones, modems and radios that can be used for mobile Internet access to the receiver. • Activate the Bluetooth device to allow access to the web interface via Bluetooth PAN connection or to a data stream via Bluetooth serial connection. OR Activate the WLAN adapter and configure WLAN profiles to access the receiver with WLAN capable devices or stream data using a WLAN connection.
Access Management	Create new users and set the access level for the receivers web interface.
Spider and remote access	Configure and open remote access connections for OWI based software, such as GNSS Spider to the receiver.
Ntrip Caster	Activate or deactivate the Ntrip caster, define the settings for the port it runs on and view the configuation of mount points and data types.
Web server	Set the HTTP port number or configure secure access to the web interface via an SSL (Secure Socket Layer) connection.
DynDNS	Allow access to the receivers web interface when using a dynamic IP address by configuring and enabling the DynDNS functionality.
FTP server	Configure access to the receivers FTP server (SD card).
Device management	Create, configure or delete modem, radio and GSM devices to be used with the receiver.
Event log	Activate the sending of event emails that contain the event log information. Set the auto delete interval for all event log entries.
Power management	Configure the power up and low power behaviour of the receiver according to the intended use case.
SNMP	Enable Simple Network Management Protocol to monitor the GR/GM receiver for conditions that warrant administrative attention.
Tools	Load new firmware or purchased options to the receiver, change the language or use the tools to format or reboot the receiver.

Network connections

Network connections: Overview

The Network connections pages allow defining the access to the receiver via different communication options.

Tab option	Description
General	Specify the receiver's hostname, define internet gateway priorities and activate backup communication.
Ethernet	Configure the Ethernet settings which will enable the receiver to be accessed via the internet.
Mobile internet	Configure access to the receiver via the internet with a mobile phone device (e.g.GSM).
Bluetooth	Configure access to the receiver via a wireless Bluetooth connection. Only on GR25 receivers fitted with a Bluetooth radio.
WLAN	Configure access to the receiver via a wireless LAN connection. Only on GR25 receivers fitted with a WLAN radio.

Network connections: General

Background Information

The general network connection page allows setting the receiver's hostname, specifying the gateway priorities and activating the backup communication.

Setting Descriptions

The table below describes the settings that can be configured on the General tab.

Hostname	Description
Receiver hostname	Enter a hostname (device name) for the receiver. • Only certain **characters** are allowed. 0123456789 ABCDEFGHIJKLMNOPQRSTUVWXYZ abcdefghijklmnopqrstuvwxyz - (hyphen is allowed) When running the receiver in a LAN, the hostname allows access to the web interface without knowing the IP address assigned to the receiver by the **DHCP** server. The default hostname for each receiver is GRxxxxxxx, where xxxxxxx is the serial number. DHCP is enabled per default. When first connecting the receiver to a LAN that runs a DHCP server, entering the default hostname in a browser window opens the receiver's web interface. The user does not need to know the IP address assigned to the receiver.

Trouble shooting

If you are not able to connect to your receiver via ethernet, please try the following:

- If the receiver has a static IP address, use this address and not the hostname.
- After you changed the ethernet configuration or the hostname of a receiver, call ipconfig /flushdns in a command prompt on the computer where you want to access the receiver. Otherwise the computer may use the local DNS cache to resolve the IP address.

Default gateway	Description
Priority	The Default gateway priority shows which gateway is used when more than one internet connection is active. The gateway listed on top will always be preferred. The gateways listed below will be used in that order should the primary gateway not be available. Click on a gateway to activate the up and down buttons. Then use the up and down buttons to change the priority of this gateway by moving it up or down in the list. When the order of the default gateway priorities is changed, an already established mobile internet connection will be re-initialized.

Backup communication	Description
Enable	Enable the backup communication to back up your primary gateway (as configured in the Priority list) with the secondary gateway. When activated, the communication backup functionality will check regularly if the data packages sent via the primary gateway reach their destination in the network. If a certain percentage of data can not reach the destination, the receiver will switch to using the backup communication line to send data. The primary gateway is checked regularly to see if the communication is working again reliably. If this is the case, a switch to the primary gateway is initiated. If the backup communication is off and the primary gateway is lost, the receiver may still be switching to the backup communication but this switch may not work reliably. Also a switch back from the backup communication line may not work.

Low bandwidth mode	Description
Enable	Select the low bandwidth mode to limit outgoing data throughput of FTP push connections. When the receiver network connection has a very low bandwidth and data streams with a constant rate and other data connections (e.g. FTP push) are configured, occasional delay of data or connection dropouts may occur. These can impact the reliability of the data streams negatively, caused by the other data connections that consume too much of the available bandwidth. One solution to overcome this issue is to limit the throughput of the data connections to a fixed part of the available bandwidth, to ensure the availability for the data streams.
Bandwidth limit	Select the value in kilobytes per second Values: 1,2,3,4,5,6,7,8,9,10,16,32,64 kB/s

Restore default values	Press to fill the form with factory default settings. The restore default button fills all fields with the default values and stores these values. Pressing the save button is not necessary. When accepting the confirmation message, all settings on this page are overwritten with the default settings.

Related topics

How to set up backup communication

Use a hostname to access an instrument with a static IP address

.

Network connections: Ethernet

Background Information

Ethernet configuration enables the receiver to be accessed via the Internet when an Ethernet cable is connected.

Setting Descriptions

The table below describes the settings that can be configured on the Ethernet tab.

IP settings	Description
Obtain an IP address automatically	Activate to obtain the IP address automatically using **DHCP**. For more information on how to access the web interface in a non-DHCP network, please refer to Setup in a non - DHCP network.
IP address	Enter the Internet protocol address of the receiver. This field can only be edited if the **Obtain an IP address automatically** field is disabled. The IP address is a 32 bit number which must be obtained from the network administrator or the Internet service provider. The valid IP range is from 1.0.0.0 to 223.255.255.255.
Subnet mask	Enter the subnet mask assigned to the subnet the receiver is connected to. A subnet mask allows IP networks to be subdivided for security and performance purposes. This field can only be edited if the **Obtain an IP address automatically** field is disabled.
Default gateway	Enter the Gateway. This is the IP address of a local default IP router on the same network. It is used to forward traffic to destinations beyond the local network. This field can only be edited if the **Obtain an IP address automatically** field is disabled. A gateway is the connection or interchange point that connects separate IP networks. For example, a Local Area Network may need a gateway to connect it to the Internet. The valid IP range is from 1.0.0.0 to 223.255.255.255.

DNS settings	Description
Preferred DNS server	The DNS (Domain Name System) server IP address which was obtained via DHCP if the option **Obtain IP address automatically** field is checked. Otherwise the DNS server can be entered manually. Valid DNS server settings are required for the automatic firmware notification and download.
Alternate DNS server	The alternate DNS server IP address which was obtained via DHCP if the option **Obtain IP address automatically** field is checked. Otherwise the DNS server can be entered manually.

Restore default values	Press to fill the form with factory default settings. The restore default button fills all fields with the default values and stores these values. Pressing the save

	button is not necessary. When accepting the confirmation message, all settings on this page are overwritten with the default settings.
Renew DHCP lease	Press to trigger a renewed IP address from the DHCP server. This option is only available when the **Obtain IP address automatically** check box is active.

Trouble-shooting

If you are not able to connect to your receiver via ethernet, please try the following:

- If the receiver has a static IP address, use this address and not the hostname.
- After you changed the ethernet configuration or the hostname of a receiver, call ipconfig /flushdns in a command prompt on the computer where you want to access the receiver. Otherwise the computer may use the local DNS cache to resolve the IP address.

If Residential Gateway is enabled and the Ethernet device is used as LAN interface, turning on DHCP may prevent Residential Gateway setup to work properly.
Please refer to the Residential Gateway Online Help page for more information.

Related topics

Receiver setup: DynDNS
Use DHCP to automatically assign an IP address and all network parameters to a instrument
Use a hostname to access a instrument with a static IP address
Receiver Setup: Residential Gateway

Network connections: Mobile Internet

Background Information

Configure mobile Internet access (e.g. via GPRS device) to the receiver.

Setting Descriptions

The table below describes the settings that can be configured on the Mobile Internet page.

Configure device for Internet usage	Description
Device	Select the device to be used to connect the receiver to the Internet. All phone/modem devices configured in the device management with mobile Internet capability are listed. When **Not used** is selected, all fields below are hidden. For using a non-default device, the device must be configured in advance, via Device Management.
Pin code	Enter the pin code for the used SIM card.
Puk code	Enter the Puk code for the used SIM card. Usually this field can be left blank.

	The Puk code is a security code for the SIM card for some devices. The Puk code needs to be entered when the pin code has been entered incorrectly more than three times. The Puk code will unblock the SIM card.
APN	Enter the access point name (APN) of a server from the network provider, which allows access to data services. Contact your provider to obtain the correct APN.
User name	Necessary to access certain APN's. Contact your provider for the APN user name.
Password	Necessary to access certain APN's. Contact your provider for the APN password.
IP address	Select a dynamic or static IP address to be used. For a static address enter the IP address manually.
Connected to	Only available on the GR25/50. Select the physical serial port for data transmission • Serial port 1 • Serial port 2 For the GR10/30 & GM10/30, Serial port 1 is configured automatically as there is only one serial port available. For slot in devices, this field is not available, the slot-in port is selected automatically. This setting is not available when a slot-in device is selected.

Related topics

Receiver setup: Device Management: Overview

How to set up a mobile Internet connection

Network connections: Bluetooth

Background Information

Use Bluetooth configuration to configure the Bluetooth device on the receiver.

Bluetooth is available only on GR25 receivers with the bluetooth hardware option.

Setting Descriptions

The table below describes the settings that can be configured on the Bluetooth page.

Configure device for Internet usage	Description
Enable Bluetooth radio	Activate to power the Bluetooth device on the receiver. If disabled, the GR25 Bluetooth device cannot be used. It is recommended to turn off the Bluetooth device when not in use to lower the power consumption on the receiver.

	The Bluetooth name that the GR25 is detected with is always equal to the Receiver hostname configured in Receiver setup: Network connections, Ethernet tab.
Bluetooth name	Bluetooth name is the hostname of the receiver. Please go to Receiver setup / Network connections: General to change the hostname/bluetooth name.
Enable discovery	Activate to allow other devices to detect the Bluetooth device of the GR25. When deactivated, only devices that had previously been connected to the GR25 via Bluetooth will be able to see the Bluetooth device on the receiver.
Bluetooth security code	Default security code is 0000. Change the code to only allow specific devices to pair with the GR25 Bluetooth device. Other devices will be able to see the GR25 Bluetooth device but will not be able to connect.

Related topics

Status: Network connections
How to use Bluetooth on the GR25

Network connections: WLAN

Background Information

Use WLAN configuration to configure the WLAN device on the receiver, allowing receiver configuration, data transfer and communication with network devices.
Or use the internet sharing functionality to connect attached devices to the internet.

WLAN functionality can only be used on GR25/50 with the WLAN radio integrated and the GLR120 WLAN option installed.

Setting Descriptions

The table below describes the settings that can be configured on the WLAN page.

Wireless radio	Description
Enable/Disable	Activate to power the WLAN radio on the receiver. If disabled, the GR25/50 WLAN radio cannot be used. The WLAN radio is deactivated. Press to activate. The WLAN radio is activated. Press to deactivate. It is recommended to turn off the WLAN radio when not in use to lower the power consumption of the receiver.

Field Descriptions

The table below describes the fields on the WLAN tab.

WLAN profiles	Description

Name	The names as configured for the listed wireless profiles.
SSID	The Service set IDs of the listed wireless profiles.
Security type	The type of wireless security applied to the network the listed profiles are connecting to.
RSSI/Signal strength	Shown for all currently detected networks. The signal strength the wireless signal is received with at the WLAN antenna. The displayed signal strength is an interpretation (No signal, verly low, low, good, very good, excellent) of the RSSI (receiver signal strength indication) value for each network. The RSSI values are mapped as follows: • RSSI < -90 or WLAN network not seen at all => "No signal" • RSSI >= -90 and < -81 => "Very low" • RSSI >= -81 and < -71 => "Low" • RSSI >= -71 and < -67 => "Good" • RSSI >= -67 and < -57 => "Very good" • RSSI >= -57 => "Excellent" For ad hoc connections an RSSI value cannot be provided. Thus "Available" will be shown if connected.

Delete	Press delete to permanently delete the WLAN profile.
Edit WLAN profile	Press to edit the WLAN profile settings. The Edit WLAN profile page will open. The profile name cannot be edited.
Create new WLAN profile (copy)	Press to create a new WLAN profile based on the settings of an existing profile.
Connect/Disconnect	Receiver is disconnected from WLAN profile. Press to connect. Receiver is connected to WLAN profile. Press to disconnect. The receiver can connect to one WLAN profile at a time. Connecting a WLAN profile will disconnect the receiver from a current connection if existing.

Create new WLAN profile	Press to open the New WLAN profile page.
Restore default values	Press to restore the default WLAN profile. This will also delete all existing WLAN profiles and turn off the wireless LAN radio.

Related topics

Status: Network connections

Network connections: New / Edit WLAN profile

Background Information

Enter the necessary settings to define a wireless LAN profile, allowing a one-to-one connection with another network device (ad hoc) or connecting to a network of devices (infrastructure).

Setting Descriptions

The table below describes the settings that can be configured on the WLAN page.

Wireless radio	Description
Profile name	Define a unique name for the wireless profile.
SSID	Enter the Service set ID of the network you want to connect to or define the SSID of you own network, when creating an ad hoc connection. Can be left blank when the Select wireless network field below is used.
Select wireless network	Press **Find wireless network** to start a search for available wireless networks. Then select a network to connect to from the drop down list. The SSID field will be updated to show the selected network.
Network infrastructure	Select the network type for the new profile. Infrastructure: Connect the GR25/50 to a network with wireless access point. Ad hoc: Create a direct wireless connection to one other device without an access point. For Ad hoc connections please note that some devices can not resolve the hostname when no DNS server is available. To make sure that the web interface can be accessed use an Ad hoc connection with a static IP address for the GR25/50, e.g. the default Ad hoc profile. For more information on using the default Ad hoc profile see How to use WLAN on the GR25/50
Network authentication	Select the method to be used for device authentication in the network to connect to or define the authentication type for the new ad hoc connection.
Encryption type	Select the method for encryption used in the network to connect to or define the encryption type for the new ad hoc connection.
Network key	Enter the network encryption key if necessary. A key is always needed unless the encryption type is set to “Disabled”. Handling encryption in ad hoc mode: In case different network keys have been entered on the GR25/50 and a Windows PC when using an ad-hoc connection, both sides will falsely report that the connection has been established. However, access to the web interface and data streaming will not be possible. In this case, double-check the security settings and the encryption key on both sides.

IP settings	Description
Obtain an IP address automatically	Activate to obtain the IP address automatically using **DHCP**. For more information on how to access the web interface in a non-DHCP network, please refer to Setup in a non - DHCP network.
IP address	Enter the Internet protocol address of the receiver. This field can only be edited if the **Obtain an IP address automatically** field is disabled. The IP address is a 32 bit number which must be obtained from the network administrator or the Internet service provider. The format of the IP address is aaa.bbb.ccc.ddd where aaa is a value ranging from 001 to 223 and bbb, ccc and ddd

	are values ranging from 000 to 255.
Subnet mask	Enter the subnet mask assigned to the subnet the receiver is connected to. A subnet mask allows IP networks to be subdivided for security and performance purposes. This field can only be edited if the **Obtain an IP address automatically** field is disabled.
Default gateway	Enter the Gateway. This is the IP address of a local default IP router on the same network. It is used to forward traffic to destinations beyond the local network. This field can only be edited if the **Obtain an IP address automatically** field is disabled. A gateway is the connection or interchange point that connects separate IP networks. For example, a Local Area Network may need a gateway to connect it to the Internet. The format of the gateway is aaa.bbb.ccc.ddd, where aaa is a value ranging from 001 to 223 and bbb, ccc and ddd are values ranging from 000 to 255.

DNS settings	Description
Preferred DNS server	Enter the DNS (Domain Name System) server IP address to be used for resolving host names. This field can only be edited if the **Obtain an IP address automatically** field is disabled.
Alternate DNS server	Enter a backup DNS (Domain Name System) server IP address to be used for resolving host names. This field can only be edited if the **Obtain an IP address automatically** field is disabled.

Renew DHCP lease	Press to trigger a renewed IP address from the DHCP server. This option is only available when the **Obtain IP address automatically** check box is active.

WEP Encryption

WEP encryption can be used in 2 versions: Open and Shared. In both cases the data is encrypted.

- Open
  Everyone can connect to the access point but only if the right encryption key is provided, data can be exchanged. Hence, if you supply the wrong key you will be authenticated and connected, however, no data frames will be passed through the Access Point or WLAN ad hoc device. This can be a bit confusing from the users perspective as he sees that the client is connected but "nothing works".

- Shared
  Shared authentication adds a handshake to the authentication process. If the wrong key is used the authentication fails and the client cannot connect to the Access Point or WLAN ad hoc device. Hence, it is not possible to connect if the wrong WEP key is supplied.

Entering a network key

Network keys are required to encrypt the WLAN connection. They can be entered in ASCII or hexadecimal format.

Enter an ASCII key using only ASCII characters:e.g. Enigma123

To enter hexadecimal strings add “0x” before the string: e.g. 0x1234567890

For WEP encryption it is possible to use more than one key for user authentication. To differentiate the various keys from each other, an index is used. To mark the index of the encryption key, add “1/” before the key (in case the first index should be used):

The key must have one of the following formats:
"1/0x1234567890" [index=1, 10-digit hexadecimal]
"zxcvb" [5-char]
"0x12345678901234567890123456 [26-digithexadecimal]
" 2/abcdefghij123 [index=2, 13-char]

If several indices exist but no key index is provided, the GR25/50 will assume the key index to be “1”.

Related topics

Status: Network connections
How to use WLAN on the GR25/50

Receiver Setup: Residential Gateway

Background Information

The Residential Gateway configuration enables the receiver to work as a gateway to the internet. This means that IT devices which are connected to the receiver via a TCP/IP connection can share the internet connection of the receiver.

Setting Descriptions

The table below describes the fields in the Residential gateway page.

Setting	Description
Activate	Activate the check box to enable the residential gateway functionality. When activated the residential gateway settings are visible and can be edited. When the residential gateway functionality is enabled, DHCP will be disabled for the selected LAN interface. This means that static IP addresses will be used for the LAN interface.
WAN interface	Select the interface to be used to establish the connection to the internet (WAN = Wide Area Network). The following interfaces can be used (if available): • Mobile internet • Ethernet • WLAN

LAN interface	Select which interface should be used to establish the connection to the device connected to the receiver which should get access to the internet. Usually this will be a laptop or another mobile device. The following interfaces can be used (if available): • Ethernet • WLAN
LAN interface IP address	Shows the fixed IP address of the LAN interface.
LAN network IP address range	Shows the IP address range available for the LAN interface.

Restore default values	Press to fill the form with factory default settings and store. The restore default button fills all fields with the default values and stores these values. Pressing the save button is not necessary. When accepting the confirmation message, all settings on this page are overwritten with the default settings.

Press the save icon to store the settings.

If the mobile internet device should be used as WAN interface, make sure to define the mobile internet device as default gateway. To do this, go to Receiver Setup > Network connections: General and move the mobile internet device to the top of the priority list.

The GR25 can be ordered as a Bluetooth or a WLAN version. WLAN functionality can only be used on GR25 with the WLAN radio and the GRL120 WLAN option installed.

Related topics

How to use residential gateway

Access Management

Access Management: Overview

Access Management is used to control access to the receiver via the web interface and FTP.

Tab option	Description
User management	• View configured users • Create new users • Delete users • Edit users details and password
Access settings	• Configure the access restriction level for the web interface • Access a link to the FTP server access restrictions page

Create a new user	• Set password

	• Configure the web interface user level • Configure the FTP server access level

Access Management: User management

Background Information

User management configuration allows the Administrator to

- View configured users
- Create new users
- Delete users
- Edit users details and password

Setting Descriptions

The table below describes the settings that can be configured on the User management tab.

Field	Description
User	The configured user name.
Web interface access	The users web interface access rights.
FTP server access	The users FTP server access rights.

Delete	Press delete to permanently delete the user. The last remaining Administrator user cannot be deleted.
Edit user	Press to edit the selected users details and password.
Create new user (copy)	Press to create a new user based on the existing user settings.

Create new user	Press to create a new user.
Restore default values	Restore the default user settings. This will delete all users and load the admin user with the default values. If the web interface access level is set to **Restricted**, then pressing this icon will redirect you to the login page. Login is then only possible with the default administrator settings. The restore default button fills all fields with the default values and stores these values. Pressing the save button is not necessary. When accepting the confirmation message, all settings on this page are overwritten with the default settings.

PUK user

The PUK (PIN Unlock Key) user is a pre-installed administrator-level user account on each GR/GM based on the receiver's serial number.
It can be used to access the receiver in case all other user credentials have been lost / after the settings have been formatted.

User name: PUK.

Password: can be found on a document accompanying the shipment of the receiver.

Please contact your local Leica representative in case this document should have been lost.

Related topics

Access Management: Access settings
Access Management: New user / Edit User
Access the web interface for the first time and change the default user

Access Management: Access settings

Background Information

The access settings allow the Administrator to

- configure the user access to the web interface
- Access a link to the FTP server access restrictions page

Setting Descriptions

The table below describes the settings that can be configured on the Access settings tab.

Field	Description
Access to Web interface is	Set the security level for web interface access. If the access settings are changed you will be automatically logged out. • **Unrestricted** All settings and information in the web interface can been viewed and changed without login. This setting is **very insecure** and therefore only recommended for example on internal networks where access without official authorization is not possible. • **Partially restricted** The user can see the Status information when opening the web interface in a browser window. Display of the Configuration settings requires a user name and password to log in. The settings available after login depend on the user status of the logged in user. • **Fully restricted** Requires a user name and password to show any information on the web interface. When the receiver URL is entered in a browser window, the login details have to be entered. The settings available after login depend on the user status of the logged in user. The **Web interface access description** below provides a summary of which pages will be available for each user depending on the access level.
Set FTP access restrictions	Press the configure the FTP server access restrictions link. The Receiver setup: FTP server page will open.

If the access settings are changed, all users will be required to login again.

Web interface access description

The **Web interface access description** provides a summary of which menus will be available for each user depending on

- whether the selected **Access to Web interface is:** Unrestricted, Partially restricted or Fully restricted, and
- the selected **Web interface user level:** Administrator, GNSS manager, Status Viewer or None. The Web interface user level is configured via Receiver setup / Access Management: User management / Create New User or Edit User.

Access to Web Interface is ...	Menu	Web interface user level			
		Administrator	GNSS manager	Status Viewer	None
Unrestricted	Status	no login required	no login required	no login required	no login required
	GNSS management	no login required	no login required	no login required	no login required
	Receiver setup	no login required	no login required	no login required	no login required
	Support	no login required	no login required	no login required	no login required
Partially restricted	Status	with login or guest login	with login or guest login	with login or guest login	with login or guest login
	GNSS management	with login	with login	no access	no access
	Receiver setup	with login	Limited access	Change password only	no access
	Support	with login	no access	no access	no access
Fully restricted	Status	with login	with login	with login	no access
	GNSS management	with login	with login	no access	no access
	Receiver setup	with login	Limited access	Change password only	no access
	Support	with login	no access	no access	no access

Related topics

Receiver setup: FTP server

Access the web interface for the first time and change the default user

New User / Edit User

Setting Descriptions

The table below describes the settings that can be configured on the New User / Edit User page.

Field	Description

User name	Enter a unique user name. • Maximum number of characters allowed is 20. • Only certain **ASCII characters** are allowed. 0123456789 ABCDEFGHIJKLMNOPQRSTUVWXYZ abcdefghijklmnopqrstuvwxyz - _ . (hyphen, underscore, period and space are also allowed)Type your drop-down text here.
Password	Input user password. • Only certain **ASCII characters** are allowed. 0123456789 ABCDEFGHIJKLMNOPQRSTUVWXYZ abcdefghijklmnopqrstuvwxyz - _ . (hyphen, underscore, period and space are also allowed)Type your drop-down text here. • The password length must be between 8 and 20 characters • The password should contain a mix of letters, numbers and symbols. • **Note: If the logged in Administrator edits their user account, the web interface access level cannot be changed.**
Confirm password	Re-enter password to confirm.
Web interface user level	Select the web interface user level. • **None** This user has no access rights to the web interface in restricted mode. In partially restricted mode the user can see the sensor status. This functionality can be used for defining users with only FTP access. • **Status Viewer** The Status viewer can login and view the receiver status when the web interface access level is set to fully restricted. • **GNSS manager** This user is allowed to view the receiver status and can access and edit all settings in the GNSS management. The user cannot access the receiver setup pages or the support menu. • **Administrator** The user can access all pages available in the receiver web interface and change all available settings Which web interface pages are visible to each user level is dependent on whether the selected Access to Web interface is: Unrestricted, Partially restricted or Fully restricted. Go to **Receiver Setup / Access management / Access settings** tab, to change this setting. The Web interface access description below provides a summary of which pages will be available for each user depending on the access level.
FTP server access	Select the FTP server access level.

	• **None** The user is not able to access the receivers SD card via a FTP connection. • **Read only** The user is able to view all folders and files on the receivers SD card via a FTP connection. The user cannot edit, delete or copy files on the SD card. • **Read / Write** The user has full access to the receivers SD card via a FTP connection. The user can view all files and folders, delete files, upload and download files.

Web interface access description

The **Web interface access description** provides a summary of which menus will be available for each user depending on

- whether the selected **Access to Web interface is:** Unrestricted, Partially restricted or Fully restricted, and
- the selected **Web interface user level:** Administrator, GNSS manager, Status Viewer or None. The Web interface user level is configured via Receiver setup / Access Management: User management / Create New User or Edit User.

Access to Web Interface is ...	Menu	Web interface user level			
		Administrator	GNSS manager	Status Viewer	None
Unrestricted	Status	no login required	no login required	no login required	no login required
	GNSS management	no login required	no login required	no login required	no login required
	Receiver setup	no login required	no login required	no login required	no login required
	Support	no login required	no login required	no login required	no login required
Partially restricted	Status	with login or guest login	with login or guest login	with login or guest login	with login or guest login
	GNSS management	with login	with login	no access	no access
	Receiver setup	with login	Limited access	Change password only	no access
	Support	with login	no access	no access	no access
Fully restricted	Status	with login	with login	with login	no access
	GNSS management	with login	with login	no access	no access
	Receiver setup	with login	Limited access	Change password only	no access
	Support	with login	no access	no access	no access

Related topics

Access Management: User management

Access Management: Access settings
Access the web interface for the first time and change the default user

GNSS Spider and remote access

GNSS Spider and remote access: Overview

Background Information

The Spider and remote access configuration page lists all ports on a GR/GM receiver that are open for any OWI based tool to connect to the receiver and change the settings via OWI commands.

Leica GNSS Spider or other OWI based tools can be connected to the receiver via

- TCP/IP server
- TCP/IP client
- Ntrip server (source)
- Serial port
- Radio
- GSM / Modem / CDMA

It is also possible to connect a receiver to the GNSS Spider site server via a USB connection or via a Bluetooth PAN connection. The receiver must be connected directly to the Spider site server using the USB cable or the direct Bluetooth connection.

- Use the default USB connection settings (IP address 192.168.254.2) to configure the site in Leica GNSS Spider.
- Use the default Bluetooth connection setting (IP address 192.168.253.2) to configure the site in Leica GNSS Spider.

It is recommended to configure two remote access ports as a minimum to utilise the GNSS Spider feature - backup communication. Detailed information on this topic can be found in the GNSS Spider online help.

Mozilla Firefox does not support the use of certain ports. Use a different internet browser if these ports need to be used. Ports blocked by default in Mozilla Firefox browser.

Setting Descriptions

The table below describes the fields in the Spider and remote access page.

Setting	Description
Icon	Connection is active. Port is open. Connection is inactive. Port is closed. To activate or deactivate a session press the Activate icon.
Allow connection via	The configured connection type that is used on GNSS Spider and the receiver.
Device	The configure device used for the remote access.
Port	The configure port on the receiver used for the remote access.
Delete	Press delete to permanently delete the remote access port configuration.
Edit Spider and remote port	Press to edit the remote access configuration. The remote access wizard will open.

Create new Spider and remote port (copy)	Press to create a new remote access configuration based on the existing configuration.
Activate	The remote access is deactivated. Click to activate the stream. The remote access is activated. Click to deactivate the stream.

Create new Spider and remote port	Click to open the Spider/remote access wizard. The wizard is a tool that guides you through the following stages of a remote access configuration: 1. Connection type - Select if you want to connect the GR/GM receiver to the Spider site server via TCP/IP server, TCP/IP client, Ntrip server (source), Serial port, Radio or GSM / Modem / CDMA - dial up. 2. Device selection and configuration. 3. Activation of remote access.

Related topics

Remote access wizard: Connection
Remote access wizard: Configure TCP/IP server
Remote access wizard: Configure TCP/IP client
Remote access wizard: Configure Ntrip server (source)
Remote access wizard: Configure Serial port
Remote access wizard: Configure Radio
Remote access wizard: Configure GSM / Modem / CDMA-dial up
Remote access wizard: Set port status

Remote access wizard: Connection

Setting Descriptions

The table below describes the settings that can be configured on the Connection page.

Setting	Description
Connection type	Select the connection type that is needed for Leica GNSS Spider or other OWI based software to connect to the receiver. TCP/IP server: This setting allows the receiver to works as a TCP server, allowing TCP clients to connect to the receiver's NET ports. TCP/IP client: This setting allows the receiver to act as a TCP client and connect to a configured IP address and port. This way no port has to be opened in the firewall on the receiver side to allow clients to connect to it. Ntrip server (source): This setting allows the receiver to act as an Ntrip source and connect to a configured Ntrip caster IP

	address, port and mount point. This way no port has to be opened in the firewall on the receiver side to allow client connections. When using this setup the receiver transmits data using the Ntrip protocol.
Serial port	This setting allows connecting the receiver directly to a PC's communication port via a GR/GM data cable with a RS232 connector.
Radio	Use two, 2-way radios to allow Leica GNSS Spider or other OWI based software to configure the receiver.
GSM / Modem / CDMA - dial up	This setting allows Leica GNSS Spider or other OWI based software to use a modem to dial into a modem connected to the GR/GM receiver and configure the receiver.

Press to change settings. Press to continue to the next wizard step.

Press to cancel and return to Spider and remote access: Overview .

Remote access wizard: Configure TCP/IP server

Background Information

The receiver works as a TCP server, allowing TCP clients to connect to the receiver's ports, configure the receiver settings and receive LB2 data.

Setting Descriptions

The table below describes the settings that can be configured on the Configure TCP/IP server page.

Setting	Description
TCP/IP port	Enter the TCP/IP port of the receiver for Leica GNSS Spider or other OWI based software to connect to.
Data receive time out	If for a Spider / OWI connection no OWI requests are received within the specified time, the connection will be automatically reinitialized. This will help keep the communication channel up and running, especially when using an instable IP network environment, e.g. mobile networks. If the timeout value is set to 0 (zero), there will be no automatic reinitialization (default setting).
Limit access range	Select the range of IP addresses which are authorized to access the receiver. The valid IP range is from 1.0.0.0 to 223.255.255.255.

Press to go back to the previous wizard step. Press to continue to the next wizard step.

Press to cancel and return to Spider and remote access: Overview .

Remote access wizard: Configure TCP/IP client

Background Information

The TCP/IP client connection setting allows the receiver to act as a TCP client and connect to a configured IP address and port. This way no port has to be opened in the firewall on the receiver side to allow clients to connect to the receiver.

Setting Descriptions

The table below describes the settings that can be configured on the Configure TCP/IP client page.

Setting	Description
TCP/IP server address	Enter the numeric IP address or the hostname of the Server to connect to. The valid IP range is from 1.0.0.0 to 223.255.255.255.
Data receive time out	If for a Spider / OWI connection no OWI requests are received within the specified time, the connection will be automatically reinitialized. This will help keep the communication channel up and running, especially when using an instable IP network environment, e.g. mobile networks. If the timeout value is set to 0 (zero), there will be no automatic reinitialization (default setting).
TCP/IP port	Enter the TCP/IP port on the Server for the receiver to connect to.

Press to go back to the previous wizard step. Press to continue to the next wizard step.

Press to cancel and return to Spider and remote access: Overview .

Remote access wizard: Configure Ntrip server (source)

Background Information

This mode allows the receiver to act as the Ntrip Server and to initiate an active connection to an Ntrip site on the Leica Spider site server or other OWI based tools.

In terms of TCP/IP, the Ntrip server mode is in fact a TCP client mode. As an Ntrip Server, the receiver connects to Leica Spider or other OWI based tools and allows configuration.

Setting Descriptions

The table below describes the settings that can be configured on the Configure Ntrip server (source) page.

Setting	Description
Ntrip caster IP address	The IP address or hostname of the Ntrip caster to connect to. The valid IP range is from 1.0.0.0 to 223.255.255.255.
TCP/IP port	Enter the TCP/IP port to connect to on the Ntrip caster.
Data receive time out	If for a Spider / OWI connection no OWI requests are received within the specified time, the connection will be automatically reinitialized. This will help keep the communication channel up and running, especially when using an instable IP network environment, e.g. mobile networks. If the timeout value is set to 0 (zero), there will be no automatic reinitialization (default setting).
Mount point	Enter the mount point to connect this Ntrip source to. The mount point is the identifier for the source on an Ntrip Caster. It is needed for Ntrip source authentication.

Password	Enter a password. A password for authentication is required in order to connect to the mount point on the Ntrip Caster.

Press to change settings. Press to continue to the next wizard step.

Press to cancel and return to Spider and remote access: Overview .

Ntrip server connections

- If the GR/GM receiver connects to the Spider Ntrip caster as an active site and tries to connect to a non-existing mount point, the Spider Ntrip caster will return an “Invalid mount point” error message. The GR/GM receiver will try to reconnect every 10s for 30 minutes.
- If the GR/GM receiver connects to the Spider Ntrip caster as an active site and tries to connect to a mount point that is already receiving data from another Ntrip server (source), the Spider Ntrip caster will return a “Mount point taken” error message. The GR/GM receiver will try to reconnect every 10s for 30 minutes.
- If the GR/GM receiver connects to the Spider Ntrip caster as an active site and tries to connect to a mount point using a wrong password, the Spider Ntrip caster will return an “Authentication failed” error message. The GR/GM receiver will not try any reconnects.
- If an Ntrip server (source) is connected to the Ntrip caster and no data is received from the source for more than 15 s, the Ntrip caster will disconnect the Ntrip server (source). This is necessary as it may happen that an Ntrip server (source) disconnection may not be done properly, leaving the Ntrip caster assuming that the connection is still available. If the Ntrip server (source) now tries to reconnect, a “mount point taken” message would be issued and the connection not be allowed. To prevent this, the connection is regularly checked for data transmission. Please make sure the data stream sent to the Ntrip caster has a rate higher than 15 s. If the connected Ntrip server (source) is a GR/GM receiver, it will continuously try to reconnect every 5 s.

Remote access wizard: Configure Serial port

Background Information

Configure the serial port settings to connect the receiver to a computer directly via a serial cable.

The settings for the COM port on the computer must match the settings for the serial connection on the receiver.

Setting Descriptions

The table below describes the settings that can be configured on the Configure serial port page.

Setting	Description
Port name	Only available on the GR25/50. Select the physical serial port for data transmission • Serial port 1 • Serial port 2 For the GR10/30 & GM10/30, Serial port 1 is configured automatically as there is only one serial port available. For slot in devices, this field is not available, the slot-in port is selected automatically.
Baud rate, Parity, Data bits, Stop bits	Select the port settings for the communication between the receiver and the PC's Com port.

Flow control	Defines which kind of handshake is used. • None: No handshake. • RTS/CTS: Handshake in both directions.

Press to go back to the previous wizard step. Press to continue to the next wizard step.

Press to cancel and return to Spider and remote access: Overview .

Remote access wizard: Configure Radio

Background Information

Radios can be used to connect the receiver to Leica GNSS Spider or other OWI based software, if the radios are configured for two-way communication.
The radio on the Leica GNSS Spider side must be pre-configured in a way that it can be addressed as serial device.

Go to Receiver Setup / Device Management page to change the communication settings of a device if needed.

Setting Descriptions

The table below describes the settings that can be configured on the Configure Radio page.

Setting	Description
Device	Select the radio device.
Channel	The radio channel can only be changed if the radio is attached. If the configured radio device is not attached, the device will be stored with the default channel 1 (or the last stored channel when the device was attached) and a message is displayed in the event log.
Connected to	Only available on the GR25/50. Select the physical serial port for data transmission • Serial port 1 • Serial port 2 For the GR10/30 & GM10/30, Serial port 1 is configured automatically as there is only one serial port available. For slot in devices, this field is not available, the slot-in port is selected automatically.

Press to go back to the previous wizard step. Press to continue to the next wizard step.

Press to cancel and return to Spider and remote access: Overview .

Remote access wizard: Configure GSM / Modem / CDMA

Background Information

The settings on this page allow Leica GNSS Spider or other OWI based software to use a modem to dial into a modem connected to the GR/GM receiver and configure the receiver.

GSM (Global System for Mobile communications) is a telecommunication standard for transmitting data packages to mobile phones.
CDMA is a telecommunication standard for transmitting data packages using the Internet protocol.

Setting Descriptions

The table below describes the settings that can be configured on the Configure GSM / Modem / CDMA page.

Setting	Description
Device	Select the device to be used. The list shows all GSM / Modem / CDMA devices configured in the device management.
PIN code	Enter the PIN (personal identification number) code for the device's SIM card.
PUK code	The PUK (PIN unblock key) code is a security code for the SIM card used on some devices. The PUK code needs to be entered when the PIN code has been entered incorrectly more than three times and the SIM card is blocked. The PUK will unblock the SIM card. This field can normally remain empty.
Connected to	Only available on the GR25/50. Select the physical serial port for data transmission • Serial port 1 • Serial port 2 For the GR10/30 & GM10/30, Serial port 1 is configured automatically as there is only one serial port available. For slot in devices, this field is not available, the slot-in port is selected automatically.

Press to go back to the previous wizard step. Press to continue to the next wizard step.

Press to cancel and return to Spider and remote access: Overview .

Remote access wizard: Set port status

Setting Descriptions

The table below describes the settings that can be configured on the Set port status page.

Setting	Description
Activate remote access	Deactivate the port configuration if you do not want to open the port immediately.

Press to go back to the previous wizard step.

Press to store the new remote access configuration and return to Configuration: Spider and remote access: Overview.

Press to cancel and return to Configuration: Spider and remote access: Overview.

Ntrip caster

Ntrip caster: Overview

The Ntrip caster allows data to be streamed to the receiver and distributed to several clients via a single TCP/IP port

Tab option	Description
Caster	Activate or deactivate Ntrip caster and define the port number that the Ntrip caster receivers and distributes streaming data.
Mount Points	Activate or deactivate existing mount points and configure new ones.

To use the Ntrip caster, both the caster must be active and at least one mount point must be configured.

Ntrip caster: Caster tab

Background Information

The Ntrip caster allows data to be streamed into the receiver via Ntrip and distributed to several clients via a single TCP/IP port, User authentication will be needed on the Ntrip source,but it is optional on the client side.

The Ntrip caster on GR/GM receivers allows authentication per mount point, not per user. This means that all clients connecting to one mount point will be doing so with the same user name and password.

The Ntrip caster on GR/GM receivers not only steams out data, but also allows the distribution of data from other Ntrip sources. GR/GM receivers can work as a standalone Ntrip casters.

Setting Description

The table below describes the settings in the caster tab.

Caster	Description
Activate Ntrip Caster	Activate the Ntrip caster functionality. This allows the activation of mount points, opening the Ntrip caster port and receiving/sending out data via Ntrip protocol.
Ntrip caster port	Define the port number on which the Ntrip caster receives and distributes streaming data. The default port for the Ntrip caster is 2101.
Allow maximum latency of	If an Ntrip client with a very slow communication connection is connected to the GR/GM Ntrip caster, data flow may be delayed and cause latency on all connected clients. Define the maximum latency allowed for each client. If this value is exceeded by one client connection, this client is automatically disconnected, to prevent latency on all other client connections. A message is shown in the event log when a client is disconnected due to high latency. The default value is 500ms.

Save changes	Press to store all Ntrip caster settings.

Ntrip connection behaviour

When working with the GR/GM receiver Ntrip caster, the following error scenarios for Ntrip server (source) and Ntrip client connections may be seen:

Ntrip server connections:

- If an Ntrip server (source) connects to the Ntrip caster and tries to connect to a non-existing mount point, the Ntrip caster will return an “Invalid mount point” error message. If the Ntrip server (source) is a GR/GM receiver, it will try to reconnect every 10s for 30 minutes.
- If an Ntrip server (source) connects to the Ntrip caster and tries to connect to a mount point that is already receiving data from another Ntrip server (source), the Ntrip caster will return a “Mount point taken” error message. If the Ntrip server (source) is a GR/GM receiver, it will try to reconnect every 10s for 30 minutes.
- If an Ntrip server (source) connects to the Ntrip caster and tries to connect to a mount point using a wrong password, the Ntrip caster will return an “Authentication failed” error message. If the Ntrip server (source) is a GR/GM receiver, it will not try any reconnects.
- If an Ntrip server (source) is connected to the Ntrip caster and no data is received from the source for more than 15 s, the Ntrip caster will disconnect the Ntrip server (source). This is necessary as it may happen that an Ntrip server (source) disconnection may not be done properly, leaving the Ntrip caster assuming that the connection is still available. If the Ntrip server (source) now tries to reconnect, a “mount point taken” message would be issued and the connection not be allowed. To prevent this, the connection is regularly checked for data transmission. Please make sure the data stream sent to the Ntrip caster has a rate higher than 15 s. If the connected Ntrip server (source) is a GR/GM receiver, it will continuously try to reconnect every 5 s.

Ntrip client connections:

- If an Ntrip client connects to the Ntrip caster and tries to connect to a non-existing mount point or a mount point that does exist but is currently not receiving any data from an Ntrip server (source), the Ntrip caster will return an “Invalid mount point” error message. If the Ntrip client is a GR/GM receiver, it will continuously try to reconnect every 5 s.
- If an Ntrip client connects to the Ntrip caster and tries to connect to a mount point using a wrong user name or password, the Ntrip caster will return an “Authentication failed” error message. If the Ntrip client is a GR/GM receiver, it will try to reconnect every 5 s for 30 s.
- If a GR/GM receiver Ntrip client is connected to the Ntrip caster and no data is received from the Ntrip caster for more than 15 s, the Ntrip client will assume that the connection is not valid anymore. This is necessary as it may happen that the connection from the Ntrip caster to the Ntrip client may be interrupted, leaving the Ntrip client assuming that the connection is still available. Please make sure the data rate connected to the Ntrip caster is higher than 15 s. If the connected Ntrip client is a GR/GM receiver, it will continuously try to reconnect every 5 s.

Related Topics

Status: Ntrip caster

Outgoing data stream wizard: Configure Ntrip server (source)

Ntrip caster: Mount points tab

Ntrip

Ntrip caster: Mount points tab

Background Information

This page provides an overview of the mount points configured on the Ntrip caster.

A mount point can be activated and deactivated. When deactivated, no client or source connections are allowed.

Configure new mount points including user authentication and the data type (as it will appear in the source table) by pressing **Creating new mount point** .

Setting Descriptions

The table below describes the fields in the mount points tab.

Setting	Description
Icon	Mount point is active

	Mount point is inactive. To activate or deactivate a data stream press the Activate icon.
Mount point name	The name of the configured mount point. This name is used by the Ntrip source and clients to define which data stream to connect to.
Stream Type	The configured outgoing data type as it will appear in the source table. This setting does not define which data type is actually steamed via the mount point.
Delete	Press delete to permanently delete the mount point.
Edit mount point	Press to edit the mount point settings. The Edit mount point page will open.
Create new mount point (copy)	Press to create a new mount point based on the settings of an existing mount point.
Activate	The mount point is inactive. Click to allows Ntrip source and clients to connect, and data to be streamed. The mount point is active. Click to deny Ntrip source and client connections.

Create new mount point	Upon pressing **Create a new mount point**, the New mount point page opens. On this page is it possible to configure data format, Ntrip source passwords, Ntrip client authentication and activate the mount point

Related Topics

Status: Ntrip caster

Outgoing data stream wizard: Configure Ntrip server (source)

Ntrip caster: Caster tab

Ntrip caster: Create new mount point

Ntrip

Create new mount point

Setting Descriptions

The table below describes the settings that can be configured in the New mount point page.

Field	Description
Mount point name	Enter a unique mount point name. Maximum number of characters recommended is 24. Only Alphanumeric **ASCII characters** and + _ are allowed. 0123456789 ABCDEFGHIJKLMNOPQRSTUVWXYZ abcdefghijklmnopqrstuvwxyz - _ . (hyphen, underscore, period and space are also allowed)
Data format	Define the data format that will be distributed via this mount point. This entry will be listed in the source table.
Identifier	Enter more detailed information to help identify the mount point, e.g. the site location.
Navigation system	Enter the satellite systems activated for the data streamed via this mount point.
Source password	Define a password for authentication of the Ntrip source. The password must be between 8 and 20 characters in length. Only certain **ASCII characters** are allowed. The password should contain a mixture of letters, numbers and symbols. 0123456789

	ABCDEFGHIJKLMNOPQRSTUVWXYZ abcdefghijklmnopqrstuvwxyz - _ . (hyphen, underscore, period and space are also allowed)
Use client authentication	Activate if you would like clients to be forced to send a user name and password in order to connect to this mount point. Deactivate if any client is allowed to connect to this mount point without authentication.
Client user name	Define a user name for the clients to identify on the mount point. Only Alphanumeric **ASCII characters** and + _ are allowed. 0123456789 ABCDEFGHIJKLMNOPQRSTUVWXYZ abcdefghijklmnopqrstuvwxyz - _ . (hyphen, underscore, period and space are also allowed)
Client password	Define a password for the clients to identify on the mount point. Only Alphanumeric **ASCII characters** and + _ are allowed. 0123456789 ABCDEFGHIJKLMNOPQRSTUVWXYZ abcdefghijklmnopqrstuvwxyz - _ . (hyphen, underscore, period and space are also allowed)
Activate	Activate the mount point instantly when saving, or leave this check box empty to store the mount point and activate later.

All Ntrip clients connecting to the same mount point will be using the same user name and password.

Related Topics

Status: Ntrip caster
Outgoing data stream wizard: Configure Ntrip server (source)
Ntrip caster: Caster tab
Ntrip

Receiver setup: Web server

Background Information

In order to allow secure connections to your receiver web interface, the GR/GM web server is SSL (Secure Socket Layer) capable. Enable HTTPS in order to activate an SSL connection.
After you have accepted the certificate, the SSL connection is established. A padlock icon is shown in many browsers indicating that an SSL connection is being used.

What is SSL used for?

A common misconception is that SSL certificate's main purpose is to protect the data that is being sent over the internet. But really this is just one of the features of SLL. Another main purpose of SSL is to certify your web site identity by a trusted third party, meaning it proves that your website is actually what it claims to be – your web site. The "trusted third party" who signed the SSL certificate, is the guarantee that a user is actually on your receivers web interface and not some other site.

To see more information on the SSL certificate of a secure website, click on the icon in one of the browsers corners. This will open a pop up box showing information about the web site and the trusted third party that issued the certificate.
For the standard SSL certificate on your receivers web interface, Leica Geosystems AG will be shown as the third party that issued the SSL certificate.

How do I get an authorized certificate?

Certificates authorized by third parties can be free or cost up to $1,500 per year.
A large number of providers are selling SSL certificates, the 6 major SSL certificate providers are listed below. If you buy a SSL certificate it will most likely be from one of these providers or re-sellers of one of them. All 6 do have minimum 128 bit key encryption.

The primary SSL certificate providers are:

1.
- Verisign
- Thawte
- InstantSSL
- Entrust
- Baltimore
- Geotrust

2. Follow these steps to generate SSL certificate products:
    1. Download & installation of openssl (Win32 OpenSSL v1.0.1e Light). Download link: http://slproweb.com/products/Win32OpenSSL.html
    2. Generate RSA private key: openssl genrsa -des3 -out domainname.key 2048
    3. Remove pass-phrase / generate PEM format (Needed for "SSL key" field on web server config page): openssl rsa -in domainname.key -out domainname.pem
    4. Generation of the CSR (Certificate Signing Request): openssl req -new -key domainname.key -out domainname.csr -config openssl.cfg

How do I get self-signed certificate?

Besides the purchased SSL certificates, there are also self-signed certificates which do not cost anything. Self-signed certificates work just as well as purchased ones but they are missing the authorization of the third party. Self-signed SSL certificates mainly guarantee the protection of your data when sending it over the internet. You will know that a self-signed certificate is used when you see an authentication warning in the browser window when accessing the page which has to be accepted before the web site opens. Such a self-signed certificate is the default that comes with the GR/GM receiver web site. The URL of the web site is not verified (as this is different for every receiver) and the certificate is self-signed by Leica Geosystems AG.

1. Follow these steps to generate SSL certificate products:
    1. Download & installation of openssl (Win32 OpenSSL v1.0.1e Light). Download link: http://slproweb.com/products/Win32OpenSSL.html
    2. Generate RSA private key: openssl genrsa -des3 -out domainname.key 2048
    3. Remove pass-phrase / generate PEM format (Needed for "SSL key" field on web server config page): openssl rsa -in domainname.key -out domainname.pem
    4. Generation of the CSR (Certificate Signing Request): openssl req -new -key domainname.key -out domainname.csr -config openssl.cfg
    5. Generation of the CRT (The self-signed certificate, Needed for "SSL certificate" field on web server config page): openssl x509 -req -days 3600 -in domainname.csr -signkey domainname.key -out domainname.crt

How do I install my SSL certificate and key?

When you have created an SSL key and an SSL certificate you will have two files that can be opened with a text editor such as note pad.

1. Open the SSL certificate (CRT file) and copy the text into the SSL certificate window on the Receiver setup / Web server page on your receivers web interface.
2. Open the key file in the same way and copy / paste the text into the SSL key window on the same page.
3. Store the settings.
4. Your certificate should now be installed. Activate the HTTPS settings and re-open the web interface. It should open as an HTTPS secure site. Click on the icon in the browser and check the certificate information.

Visit the Qualys SSL Labs website for important news and additional information regarding secure connections with SSL/TLS.

Please read the private key and certificate recommendations from Qualys SSL Labs.

Mozilla Firefox does not support the use of certain ports. Use a different internet browser if these ports need to be used. Ports blocked by default in Mozilla Firefox browser.

Setting Descriptions

The table below describes the fields in the Web server page.

The keyboard short cuts **CTRL +C** and **CTRL +V** can be used to copy and paste the **SLL certificate** and **SSI key** into the web interface.

Web server	Description
Protocol	Select the protocol **HTTP:** Use standard hypertext transfer protocol communication **HTTPS:** Use secure HTTP communication If HTTPS is activated, the browser will automatically redirect to the standard HTTPS port if not configured otherwise.
Custom port	Enter a custom port number if you wish to override the default settings. The default ports are used automatically if the field is left blank. **Default HTTP port:** 80 **Default HTTPS port:** 443 If the default ports are not used, then the port number needs to be entered in the browser window when trying to access the web interface.
Automatic status page reload	Disable to turn off the automatic page reload for each of the status pages and the status block. Per default all status pages and the status block are automatically updated. When the automatic reload is disabled, status pages and the status block show the current status when accessing the page. To see the latest status, leave and re-access the page. This reduces loading time and is advantageous when using an Internet connection

	with a very low bandwidth (e.g. satellite communication).

SSL certificate	
SSL certificate	Paste a signed certificate in X.509 PEM format here. **Open SSL License** /* ========== * Copyright (c) 1998-2004 The OpenSSL Project. All rights reserved. * * Redistribution and use in source and binary forms, with or without * modification, are permitted provided that the following conditions * are met: * * 1. Redistributions of source code must retain the above copyright * notice, this list of conditions and the following disclaimer. * * 2. Redistributions in binary form must reproduce the above copyright * notice, this list of conditions and the following disclaimer in * the documentation and/or other materials provided with the * distribution. * * 3. All advertising materials mentioning features or use of this * software must display the following acknowledgment: * "This product includes software developed by the OpenSSL Project * for use in the OpenSSL Toolkit. (http://www.openssl.org/)" * * 4. The names "OpenSSL Toolkit" and "OpenSSL Project" must not be used to * endorse or promote products derived from this software without * prior written permission. For written permission, please contact * openssl-core@openssl.org. * * 5. Products derived from this software may not be called "OpenSSL" * nor may "OpenSSL" appear in their names without prior written * permission of the OpenSSL Project. * * 6. Redistributions of any form whatsoever must retain the following * acknowledgment: * "This product includes software developed by the OpenSSL Project * for use in the OpenSSL Toolkit (http://www.openssl.org/)" * * THIS SOFTWARE IS PROVIDED BY THE OpenSSL PROJECT ``AS IS'' AND ANY * EXPRESSED OR IMPLIED WARRANTIES, INCLUDING, BUT NOT LIMITED TO, THE * IMPLIED WARRANTIES OF MERCHANTABILITY AND FITNESS FOR A PARTICULAR * PURPOSE ARE DISCLAIMED. IN NO EVENT SHALL THE OpenSSL PROJECT OR * ITS CONTRIBUTORS BE LIABLE FOR ANY DIRECT, INDIRECT, INCIDENTAL, * SPECIAL, EXEMPLARY, OR CONSEQUENTIAL DAMAGES (INCLUDING, BUT * NOT LIMITED TO, PROCUREMENT OF SUBSTITUTE GOODS OR SERVICES; * LOSS OF USE, DATA, OR PROFITS; OR BUSINESS INTERRUPTION) * HOWEVER CAUSED AND ON ANY THEORY OF LIABILITY, WHETHER IN CONTRACT,

	* STRICT LIABILITY, OR TORT (INCLUDING NEGLIGENCE OR OTHERWISE) * ARISING IN ANY WAY OUT OF THE USE OF THIS SOFTWARE, EVEN IF ADVISED * OF THE POSSIBILITY OF SUCH DAMAGE. * ========== The keyboard short cuts **CTRL+C** and **CTRL+V** can be used to copy and paste the **SLL certificate** and **SSI key** into the web interface.
SSL key	Paste an RSA private key in PEM format here. **Original SSLeay License** ---------- * Copyright (C) 1995-1998 Eric Young (eay@cryptsoft.com) * All rights reserved. * * This package is an SSL implementation written * by Eric Young (eay@cryptsoft.com). * The implementation was written so as to conform with Netscapes SSL. * * This library is free for commercial and non-commercial use as long as * the following conditions are aheared to. The following conditions * apply to all code found in this distribution, be it the RC4, RSA, * lhash, DES, etc., code; not just the SSL code. The SSL documentation * included with this distribution is covered by the same copyright terms * except that the holder is Tim Hudson (tjh@cryptsoft.com). * * Copyright remains Eric Young's, and as such any Copyright notices in * the code are not to be removed. * If this package is used in a product, Eric Young should be given attribution * as the author of the parts of the library used. * This can be in the form of a textual message at program startup or * in documentation (online or textual) provided with the package. * * Redistribution and use in source and binary forms, with or without * modification, are permitted provided that the following conditions * are met: * 1. Redistributions of source code must retain the copyright * notice, this list of conditions and the following disclaimer. * 2. Redistributions in binary form must reproduce the above copyright * notice, this list of conditions and the following disclaimer in the * documentation and/or other materials provided with the distribution. * 3. All advertising materials mentioning features or use of this software * must display the following acknowledgement: * "This product includes cryptographic software written by * Eric Young (eay@cryptsoft.com)" * The word 'cryptographic' can be left out if the rouines from the library * being used are not cryptographic related :-). * 4. If you include any Windows specific code (or a derivative thereof) from

	* the apps directory (application code) you must include an acknowledgement: * "This product includes software written by Tim Hudson (tjh@cryptsoft.com)" * * THIS SOFTWARE IS PROVIDED BY ERIC YOUNG ``AS IS'' AND * ANY EXPRESS OR IMPLIED WARRANTIES, INCLUDING, BUT NOT LIMITED TO, THE * IMPLIED WARRANTIES OF MERCHANTABILITY AND FITNESS FOR A PARTICULAR PURPOSE * ARE DISCLAIMED. IN NO EVENT SHALL THE AUTHOR OR CONTRIBUTORS BE LIABLE * FOR ANY DIRECT, INDIRECT, INCIDENTAL, SPECIAL, EXEMPLARY, OR CONSEQUENTIAL * DAMAGES (INCLUDING, BUT NOT LIMITED TO, PROCUREMENT OF SUBSTITUTE GOODS * OR SERVICES; LOSS OF USE, DATA, OR PROFITS; OR BUSINESS INTERRUPTION) * HOWEVER CAUSED AND ON ANY THEORY OF LIABILITY, WHETHER IN CONTRACT, STRICT * LIABILITY, OR TORT (INCLUDING NEGLIGENCE OR OTHERWISE) ARISING IN ANY WAY * OUT OF THE USE OF THIS SOFTWARE, EVEN IF ADVISED OF THE POSSIBILITY OF * SUCH DAMAGE. * * The licence and distribution terms for any publically available version or * derivative of this code cannot be changed. i.e. this code cannot simply be * copied and put under another distribution licence * [including the GNU Public Licence.]

Receiver setup: DynDNS

Background Information

The DynDNS page allows the configuration of a dynamic DNS service to ensure access to the web interface of a receiver with a dynamic IP address. This is especially useful when the receiver is accessed via mobile Internet connection that in most case provides only dynamic IP addresses.

- **When to use DynDNS**

  The DynDNS functionality allows clients to use an Internet domain name to address the receiver with a dynamic IP address. The typical use case for this functionality is a receiver with an Internet connection via a GPRS / mobile Internet device. In this setup the receiver will have a different IP address every time the Internet connection is established.

  Another use case is a GR/GM receiver behind a router in a local network, where the router is connected to the Internet and regularly gets an updated IP address. The receiver will check every 12min for a new IP address on the router and updates the DynDNS settings when necessary.

- **System Requirements**

Requirement	Description
DNS Server	To use the DynDNS service, it is necessary to have a DNS server installed in same network as the receiver. A DNS server can find the IP address assigned to a hostname. This is necessary because although the DNS server knows the hostname of the DynDNS service, the IP address of the service can change. The DNS server makes it possible to find the DynDNS server IP address, thus allowing access to the DynDNS service.
Register for a DynDNS account	You need to register for a DynDNS account to use this functionality. The GR/GM receiver allows the use of the three most common DynDNS services on the Internet. At registration enter the hostname you want your receiver to be accessed with. Enable wildcard use. Mail exchanger functionality is not necessary.
Available ports	To use the full web interface functionality you need to apply for an APN profile that includes the APN (access point name) and a list of open ports from your provider. Make sure that for Email and FTP push, the required ports from your SMTP and FTP server are available. Also make sure to change the **HTTP port** (Receiver setup / Web server), the **FTP control port** and **FTP data port range** (Receiver setup / FTP server) to those open ports available from your provider.

- ## DynDNS step-by-step

  Follow the steps below to enable using DynDNS on a GR/GM receiver:

-

Step	Action
1	Register at DynDNS service: Go to one of the supported DynDNS services and register for an account. At registration enter the hostname you want your receiver to be accessed with. Enable wildcard use. Mail exchanger functionality is not necessary. Click here for further information on Hostname rules.
2	Get an APN profile from your Internet Service provider: In order to connect to the Internet from your receiver, you need to get the APN from your provider and also a list of all ports that are open and available for use. This profile needs to be activated for each SIM card you want to use for Internet access on your receiver. When using Email and FTP push, make sure that the relevant SMPT and FTP ports are open. Also for DynDNS service, either port 80, 8245 or 443 have to be available. The profile also needs to contain the IP of at least one DNS server that is run by your provider. By default, port 80 (outbound) is used when discovering the receiver's externally visible IP address. Unfortunately many firewall and proxy setups block this port. To bypass this problem, port 8245 is normally used for accessing checkip.dyndns.org. Please and make sure this port is open. GR/GM receivers offer 3 choices of DynDNS hosting services. The access ports for these are as follows: • DynDNS.com 8245 • No-ip.com 8245 • Two-DNS.de 80 Please make sure the appropriate ports are open depending on which service you are using.
3	Apply correct port numbers: After you received a list of the available ports, go to **Receiver setup / Web server** and change the HTTP port accordingly. Also the FTP control port and data port range might need to be changed.
4	Connect a GRPS phone to the receiver: To connect to the Internet via GPRS please refer to **Receiver setup / Network connections** and apply the correct configuration on the mobile Internet tab. Make sure to activate the

	mobile Internet gateway as the default gateway.
5	Configure DynDNS functionality: Enter all necessary settings as described below. After pressing **Store**, the receiver should connect to the DynDNS service and show the current IP of the receiver in the message log.

-

Setting Descriptions

Field	Description
Service provider	Lists all available DynDNS service providers. Select the provider that the hostname of your receiver has been registered with. GR/GM receivers support: • DynDNS.com • No-ip.com • Two-dns.de/en
Hostname	Enter the hostname that the receiver's web interface is accessed with from the Internet. This is the hostname that has been registered at the selected DynDNS service. Click here for further information on Hostname rules.
Username	Enter the user name for login at the DynDNS service. The characters allowed in a username are a subset of the ASCII character set, and include the characters a through z, A through Z, digits 0 through 9, and the hyphen. This rule is known as the LDH rule (letters, digits, hyphen). The use name is interpreted in a case-independent manner. Labels may not start or end with a hyphen, nor may two hyphens occur in sequence.
Password	Enter the password for login at the DynDNS service.
Interface	Define the interface for which the IP address is registered with the DynDNS service. Per default this is set to **Automatic** and will always send the IP address of the configured default gateway. For the backup communication use case with **Mobile internet** as the backup communication interface, choose to always register the Mobile internet IP address with the DynDNS service. This will make sure that there are no delays when trying to switch to the backup communication channel.

Related topics

Receiver setup / Network connections: Ethernet

How to use DynDNS service on receiver

Receiver setup: FTP server

Background Information

The FTP server configuration page is used to enter the necessary information for accessing the receiver's FTP server (attached storage devices).

The FTP server can also be accessed via a TCP/IP connection over USB cable. The settings for this connection are hard wired. For more information on setting up a USB connection, see Setup via Web Interface over USB.

Mozilla Firefox does not support the use of certain ports. Use a different internet browser if these ports need to be used. Ports blocked by default in Mozilla Firefox browser.

When accessing the FTP server the following wildcards can be used together with the DIR command:

- dir *.zip
- dir New*
- dir Newton_5?8.zip
- dir *ton_588.zip
- dir *ton_588.*
- dir *207k*

Setting Descriptions

The table below describes the fields in the FTP server page.

Setting	Description
Enable FTP server	Turn the FTP server on or off on the receiver. If disabled, FTP access to the receivers attached storage devices is not possible.
Allow anonymous access	Activate to allow read only access to anonymous users.
Control connection port	Enter the TCP/IP port where the FTP server listens for incoming connections. **Default**: 21
Data connection port range (passive mode)	Enter the TCP/IP port range used for passive mode data transfers. **Default:** 50000 - 51000 For an active mode transfer the port number <control connection port - 1> is used (default: 20).
Session timeout	Select the time in seconds after which the FTP server drops inactive connections. **Default:** 180 A maximum of 6 simultaneous connections is possible on the GR/GM receiver FTP server.

Restore default values	Press to fill the form with factory default settings and store. The restore default button fills all fields with the default values and stores these values. Pressing the save button is not necessary. When accepting the confirmation message, all settings on this page are overwritten with the default settings.

Press the save icon to store the settings.

Related topics

Setup via Web Interface over USB

Device Management

Device Management: Overview

Device Management is used to create, configure or delete modem, radio and GSM devices to be used with the receiver.

Tab option	Description
Modem / Phone	• View all default and user defined modem and phone devices • Create new modem and phone devices • Delete modem and phone devices • Edit modem and phone device details • Check which modem or phone devices are currently in use
Radio	• View all default and user defined radio devices • Delete radio devices • Check which radio devices are currently in use

Device Management: Modem / Phone

Background Information

Create, configure or delete modem and phone (GSM) devices to be used with the receiver.

Setting Descriptions

The table below describes the settings that can be configured on the Modem / Phone tab.

Settings	Description
Icon	Device is in use. If a device is in use it cannot be deleted.
Name	The device name. Click the device name to view the currently configured device communication settings.
Type	The device type, default or user defined.
Group	The device grouping, GSM/GPRS, CDMA, TDMA, UMTS or modem.
Port	The port the device can be connected to.
Delete	Press delete to permanently delete the device.
Edit device	Press to edit the device settings. The edit device wizard will open.
Create new device (copy)	Press to create a new device based on the settings of an existing device.

Restore all default phones and radios	Press to restore the default values. • All device settings for default devices are restored. • All deleted default devices are restored.

	• All user defined device will be kept.

Related topics

Device Management: Radio

Device Management: Radio

Background Information

View and delete radio devices to be used with the receiver.

Setting Descriptions

The table below describes the settings that can be viewed on the Radio tab.

Settings	Description
Icon	Device is in use. If a device is in use it cannot be deleted.
Name	The device name. Click the device name to view the device communication settings.
Port	The port the device can be connected to.
Delete	Press delete to permanently delete the device.

Restore all default phones and radios	Press to restore the default values. • All deleted default devices are restored.

Related topics

Device Management: Modem / Phone

Device Management: New / Edit modem/phone device

Setting Descriptions

The table below describes the settings that can be configured on the New / Edit modem/phone page.

Settings	Description
Device type	Lists the device type.
Device name	Enter or edit the device name.
Mobile internet capable	Configure if the device can be used to access the internet.
Baud rate, Parity, Data bits, Stop bit, Flow control	Set the device communication settings.

Press to continue to the next wizard step.

Press to cancel and return to Device Management: Modem / Phone

Device Management: GPRS / Internet initialization

Setting Descriptions

The table below describes the settings that can be configured on the GPRS / Internet initialization page.
This page is only shown when **Mobile internet capable** is set to **Yes** on the New / Edit modem/phone page.

Settings	Description
Init string 1	Enter a valid AT command to initialize the device.
Init string 2	Enter a valid AT command to initialize the device.
Connect string	Enter a valid AT command to connect to the internet.

Press to continue to the next wizard step.

Press to cancel and return to Device Management: Modem / Phone

Device Management: GSM / CSD initialization

Setting Descriptions

The table below describes the settings that can be configured on the GSM / CSD initialization page.

Settings	Description
Init string 1	Enter a valid AT command to initialize the device.
Init string 2	Enter a valid AT command to initialize the device.
Dial string	Enter a valid AT command to connect to the device.
Hangup string	Enter a valid AT command to end the network connection.
Escape string	Enter a valid AT command to switch into command mode before using the hangup string.

Press to change settings.

Press to save the logging session.

Press to cancel and return to Device Management: Modem / Phone

Receiver setup: Event log

Background Information

The Configuration: Event log page is used for configuring and editing the settings for sending automatic event emails containing all messages from the event log.
The page also allows settings the automatic delete interval for all event log messages.

Setting Descriptions

The table below describes the settings that can be configured on the Event log page.

Cleanup	Description

Autodelete event log entries	Select the time interval after which event log messages are deleted from the receivers data base.

Event log emailing	Description
Enable event email	Activate to send the content of the event log via email. When activated the Event log emailing settings are visible and can be edited.

Send event email to	Enter a single email address or a list of email addresses (separated by semicolon ";") to send the event log to.
Email address of sender	Enter the email address to be displayed as the sender when emailing the event log.
Mail server name (SMTP)	Enter the IP address or the domain name of the SMTP server to be used.
Mail server port	Enter the TCP port number of the SMTP server (commonly used defaults: 25 or 587).
Mail server username	Enter the username as configured for the SMTP server account.
Mail server password	Enter the password as configured for the SMTP server account.
Send event email every	Select the interval to send event email. The email interval will be aligned with midnight UTC time. This means for example, if you select a time interval of 6hrs and your local UTC time is +2hrs, event emails will be sent at 8am, 2pm, etc...

Save changes	Press to store all event log and email settings.
Send test email	Press to send a test email using the entered settings. Check the event log for results.
Restore default values	Press to fill the form with factory default settings. The restore default button fills all fields with the default values and stores these values. Pressing the save button is not necessary. When accepting the confirmation message, all settings on this page are overwritten with the default settings.
Clear complete event log	Press to permanently remove all entries from the event log. **This cannot be undone!**

Please note that verbose messages are not included in Event emails. Go to Status / Event log, adjust the filter settings to include verbose messages and use the download button in order to have all messages, including the verbose messages. This procedure should be applied before contacting support.

Verbose mode will be deactivated after closing the browser, logging out of the receiver, or rebooting the receiver.

Related topics

Status: Event log

Receiver setup: Power management

Background Information

Configure the power up and low power behaviour of the receiver according to the intended use case.

Setting Descriptions

The table below describes the settings that can be configured on the Power management page.

Power supply	Description
Primary supply	GR25/50: Select the primary power supply. • External 1 External 1 is used as the primary supply. • **External 2** External 2 is used as the primary supply. • **Power over Ethernet (PoE)** PoE is used as the primary supply (requires network connection with Power over Ethernet compliant with the standard IEEE 802.3, class 0 PoE solution). ☞ If the selected primary power supply is no longer available then the receiver automatically switches to a secondary power supply, if available. The receiver automatically selects the power supply in the following order of priority 1. External 1 or 2 (whichever is available) 2. Power over Ethernet (PoE) 3. Internal battery ☞ PoE supplies 13 Watts of current. This is insufficient for some external devices. If insufficient current is available for external devices, they will be disabled by the receiver. Please check the devices power specification before use or use an external power supply to power the device.

Internal battery	Description
Charging mode	GR25/50: Select the internal battery charging mode. • **UPS mode** Uses trickle charging to optimise the life span of the battery. This mode is ideal for permanent reference station installations where the internal battery is used as a temporary backup supply during periods when the primary external supply fails. Note that the charge will not reach 100%. • **Campaign mode** Campaign mode uses cycle charging to optimise battery charge for field campaigns. This mode is ideal if the battery is regularly used as the primary power supply. ☞ Internal battery charging is only initiated when the power received from the external power supply is at least 2V above battery voltage.

Power failure recovery GR10/30 & GM10/30	Description
Reboot after power failure	Select the power failure recovery setting. • **Always** After a power failure, the system will immediately start up once power is available again, even if there is very low power available. This should only be selected when the system is powered by an external main AC/DC power source. This option is not recommended for systems powered by batteries, as it could affect a deep discharge and even destruction of the battery. • **Sudden loss only** After a power failure, the system only starts up again if an abrupt power failure occurred. For example, after a short circuit or unplugging the batteries by mistake. The system will not power up automatically following a slow loss of power such as an external battery running flat.

External power source protection (GR25/50 only)	Description
Power up voltage	Enter the minimum voltage level at which the receiver will automatically power up. If power comes back after a power failure but the defined power up voltage level is not reached, the receiver will not reboot. This can prevent deep discharge of external batteries used to power the receiver. The minimum power up voltage is 11.3V.
Power down voltage	Enter the minimum voltage level at which the receiver will automatically power down. Even if the external power source could continue to power the receiver, the receiver will power down to protect the external power source, once the power down voltage is reached. The minimum power down voltage is 10.5V. The power down voltage must always be at least 0.8V below the power up voltage to prevent constant reboot of the receiver.

The power up and power down voltages for GR10/30 and GM10/30 receivers are 10.5V and 10 V, respectively.

The receiver only starts up when the external power supply voltage reaches the user-defined value. This setting can be used to stop the receiver continually starting up and powering down when a fluctuating external power supply is attached, such as a battery charged by solar panels.

If a power down value is defined that is higher than the current power input value, the receiver will power down.
If a power up value is defined that is higher than the current power input value, the receiver will not boot when the power button is pressed. Instead the power LED will flash red 3 times to indicate that the input power is too low.
Pressing the power button for 30 seconds will boot the receiver and overwrite the

configured power up and down values with the default values.

Boot receiver on pulse to port	Description
Serial Ports	Determines if the receiver powers up when a pulse is received at either of the serial ports (P1) or (P2). Serial (P2) is only available on the GR25/50

For the receiver to power up on pulse to port, the pulses must have the following voltage/length:

Voltage [V]	Pulse length [microseconds]
3	> 400
5	> 200
8	> 120
10	> 90
15	> 60

Reducing power consumption

For installations where low power consumption is a priority the following settings are recommended:

- GPS L1&L2 and GLONASS L1&L2 tracking only
- Disconnect the Ethernet cable
- Disable Bluetooth or WLAN
- Disable internal battery charging
- Disable any external devices

Related topics

Power supply
LED Indicators: GR10/30 & GM10/30
LED Indicators: GR25/50
Web Interface:User Interface
Status: System resources

Receiver setup: SNMP

Background Information

Simple Network Management Protocol (SNMP) is an Internet-standard protocol for managing devices on IP networks, in this case GR/GM receivers. It can be used in network management systems to monitor receivers for conditions that warrant administrative attention. It can also be used to monitor other IP based network devices like routers, switches or modems, as many modern network devices support the SNMP protocol. This means that by using SNMP protocol all the devices of the network infrastructure (communication devices and GNSS receivers) can be monitored if they support SNMP. This may help in tracking down network issues, like malfunctioning routers, bandwidth issues and other problems that may affect the availability and reliability of GNSS network services.

Talking in SNMP terminology, there is always an agent (e.g. a GR/GM receiver) and a manager (e.g. a network management/monitoring system). An agent provides information that has to be requested by the manager.

Setting Descriptions

The table below describes the settings that can be configured on the SNMP page in order to activate the SNMP agent on a GR/GM receiver.

SNMP agent	Description
Enable SNMP	Activate to allow SNMP access on port 161 via UDP. It allows a manager to query MIB (Management Information Base) objects from the receiver.
Community	Enter the community name. This is essentially a password to authorize access to the GR/GM receiver when using SNMP. The community string is received with every request and the receiver will only reply if the same string was sent as configured in this text field. GR/GM receivers only support 'read-only' access, independent of the community string configured. 'Read-write' and 'trap' access is not supported at this stage. By default the Community name is set to public. Community strings are case sensitive.
System location	Enter the location of the receiver (e.g. the address) to easily find it in case maintenance is needed. This field can be left blank.
System contact	Enter the name and/or email address of the person responsible for this receiver to easily get in contact with, in case maintenance is needed. This field can be left blank.

Save changes	Press to store the SNMP settings.

It is highly recommended that SNMP is not enabled when the receiver is connected to the Internet. The SNMP community string authentication is sent unencrypted and considered a high security risk.

GR/GM receivers support SNMP versions v1, v2p and v2c.

Many different status variables can be queried and monitored using SNMP, for example:

System information	Name, contact, location, ...
Interface information	Availability, speed, MAC address, state, in/out octets, in/out pkts, in/out errors, IP address, gateway address, netmask address, routing information, ...
Process information	Executed processes, CPU load per process, ...

These and many other parameters are listed in a "management information base". This is a virtual database that is used to managed all SNMP parameters that can be requested. This is a tree-like structure of the management information base:

mgmt

--mib-2

--system

--interfaces

--...

--host

--hrSystem

--hrSystemUptime

--...

Each parameter has a unique object ID assigned to it. This can then be used to query the particular parameter.
In order to obtain the object ID (OID) of the particular parameter you want to monitor, you can use "MIB browsers" to manually query which parameters are supported by a certain network device.

The following table lists some important parameters that could be monitored using SNMP.

Parameter Description	Name	Object ID
System Information		
System Contact	sysContact	.1.3.6.1.2.1.1.4.0
System Name	sysName	.1.3.6.1.2.1.1.5.0
System Location	sysLocation	.1.3.6.1.2.1.1.6.0
System Uptime	sysUpTime.0	.1.3.6.1.2.1.1.3.0
Ethernet Interface		
Status	ifOperStatus.3	.1.3.6.1.2.1.2.2.1.8.3
Incoming Octets	ifInOctets.3	.1.3.6.1.2.1.2.2.1.10.3
Outgoing Octets	ifOUtOctets.3	.1.3.6.1.2.1.2.2.1.16.3
USB Interface		
Status	ifOperStatus.2	.1.3.6.1.2.1.2.2.1.8.2
Incoming Octets	ifInOctets.2	.1.3.6.1.2.1.2.2.1.10.2
Outgoing Octets	ifOUtOctets.2	.1.3.6.1.2.1.2.2.1.16.2

More information on SNMP can be found on the websites mentions below:

Example of a free MIB browser:
http://ireasoning.com/mibbrowser.shtml

Find more information on the management information base and the contained parameters here:
http://www.iana.org/assignments/smi-numbers

This document also lists "requests for comments" (RFC) documents describing the parameters in more detail, e.g
http://www.faqs.org/rfcs/rfc1514.html

General information on SNMP:
http://en.wikipedia.org/wiki/Simple_Network_Management_Protocol
http://en.wikipedia.org/wiki/Management_information_base

Receiver setup: Tools

Receiver Setup: Tools - Overview

The Receiver Setup: Tools page allows:

Tab option	Description
Tools	Power down and reboot the receiver, format the SD card, initialise the ephemeris and almanac, reset and store the receiver settings, stop the external USB storage device and reset the all-time high and low internal temperature values.
Firmware management	Load and delete firmware files.
Option management	Load or delete options on the receiver. This page lists all purchased options that are currently installed on the receiver.
Language management	Upload language files from the computer to the receiver and select which language should be used.
Receiver settings backup	Backup and upload receiver settings.

Receiver setup: Tools

Setting Descriptions

The table below describes the fields in the Tools tab.

Action	Icon	Description
Power down		Press to power down the receiver. After power down, the web interface will redirect to the Leica Geosystems GR/GM receiver web site.
Reboot		Press to reboot the receiver. After reboot, you will be redirected to the Web interface login page.
Format		Select **SD card** to delete the complete SD card content including all data stored for each logging session. The GR10/30 & GM10/30 do not support the use of external USB drives and only allow the option to format the SD card. Select **External USB** drive to delete the complete USB drive content including all data stored for each logging session that is configured to push data to this drive.
Format receiver settings		Select from the list box: • **Reset all:** Press to reset all receiver settings to their default values. This includes all communication settings. Remote access to the receiver might not be possible after the reset. When the receiver settings are reset, all logging sessions and data streams are deleted. View the default settings. • **Keep communication settings:** Press to reset all receiver settings except the communication settings. Always use this setting when formatting the receiver settings for a remotely controlled receiver. The following receiver settings will not be overwritten • Spider and remote ports • Network connections - Ethernet • Network connections - Mobile Internet • Network connections - Bluetooth *

		• Network connections - WLAN * • DynDNS settings • Web server settings • The device used for mobile Internet setup (changed default devices and user defined devices) * GR25/50 only
Initialize measurement engine		Press to delete all current ephemeris and almanac data and restart the position computation.
Safely remove USB drive (GR25/50 only)		Press to stop and power down the USB drive to safely remove it from the receiver. Unplugging the USB drive without stopping it can cause data loss and may prove to be harmful for the life of the USB device.
Reset internal temperature high/low		Press to reset the recorded internal temperature (high/low) of the receiver.

Press the associated icon to execute the selected action.

The actions, **Reboot**, **Format SD card or USB device**, **Format receiver settings** and **Initialize measurement engine**, if executed, will result in the receiver rebooting.

FAT32 format should not be used for memory devices bigger than 32GB.

The GR25/50 supports the use of FAT16/FAT32/ExFAT devices. NTFS devices are not supported. Formatting of NTFS devices is possible. The disk format will be changed to ExFAT.

External hard disks that comply with USB 2.0 specifications (do not use more than 500 mA at any time) can be powered by the GR25/50 receiver.

Please make sure the USB hard drive used with the GR25/50 complies with this specification. If a USB hard disk is used that does not comply with this specification, it is highly recommended to self-power the hard disk when used with the receiver.

External memory sticks are powered by the GR25/50.

When the external USB drive is formatted by the receiver, the exFAT file system is used. Note that Windows XP does not support this file system, and will not read the drive without an additional update, which is available here:
http://www.microsoft.com/download/en/details.aspx?id=19364

Related topics

Appendix G: Default settings
Format receiver settings via Web interface step-by-step
Format receiver settings via instrument buttons step-by-step
Status: System resources

Receiver setup: Firmware management

Background information

In order to manually or automatically install a new firmware version, it must be first loaded onto the SD card.

Press **Upload new firmware file** , to select the firmware file and upload it.
OR Activate the automatic upload of the firmware file to the SD card.

For further information please read the following topics

- Software: Overview
- Is my firmware up to date?
- Firmware upgrade step-by-step
- Firmware upgrade using Leica GNSS Spider
- Loading a Language file

Please ensure that there are no power interruptions during the firmware upgrade!

Setting Descriptions

The table below describes the fields in the Firmware tab.

Firmware	Description
Loadable firmware files	The name of the firmware file. All firmware files loaded onto the SD card are shown.
Version	The firmware version number.
Location	The location of the firmware file.
Delete	Press to delete the firmware file.
Install	Press to install the firmware file.

Upload new firmware file	Press to upload a new firmware file from the computer to the receiver. Opens the File upload page.

Available firmware upgrades	Description
Available firmware upgrades	The name of the firmware file available for download from the Leica web site. This field shows if there is a later firmware version available on the Leica web site than the one installed on the receiver.
Version	The firmware version number.
Required maintenance date	Installing new firmware is only possible if a valid maintenance key is available.
Download from Leica website	The link starts a download of the latest firmware from the Leica website.

Automatic firmware upgrades	Description
Download automatically	Activate to download the firmware to the receiver's SD card automatically from the location specified at **Download from**.
Download from	Select the location from which the new firmware file is to be downloaded. The file download can be done from:

	• Leica Geosystems - our Leica Geosystems web server where new firmware files are available at release. Note: the file download will only be done if a valid maintenance option is installed on the receiver. • A user defined FTP location - All FTP locations created at **GNSS management - FTP and USB locations** can be selected. The user must load the new firmware file to this location to allow automatic download to the receiver's SD card. The receiver will check every 24 h if a new firmware file s available for download.
Install automatically	Activate to install a new firmware file automatically at the time specified at Install. A new firmware file is only installed if: • the firmware file is available on the receiver's SD card, • the installed maintenance option is valid, • the firmware file type matches the receiver type, • the firmware file has a higher version than the already installed firmware.
Install	Select the time at which the new firmware file is to be installed. There are three options for the installation timing: • **after automatic download**. Only available when the automatic download of the firmware to the SD card was done automatically. As soon as the download is finished, the firmware file installation is started. • On the day the firmware is found on the SD card, at a specified time: Select "**same day**" and set a time for the firmware installation. The receiver will install the firmware on the day it was detected on the SD card, at the time specified. If this time has passed when the file was found, the firmware will be installed the next day at that time. • On a specified weekday at a specified time: Select the day of the week and the time for firmware installations, e.g. Sunday at 0:00. After the receiver has detected a new firmware file on the SD card, it will wait for the configured day and time of the week and then install the firmware file.

Valid DNS server settings are required for the automatic firmware notification and download.

Related topics

Receiver setup: File upload

Receiver setup: Option management

Background Information

The Option management page allows the installation and deletion of options, and provides an overview of all purchased options that are currently installed on the receiver.

Setting Descriptions

The table below describes the information that is contained in the Options tab.

Field	Description
Install option keys	To install a new option either: • **Key:** Enter the option key. The key is contained in the option file. You can copy and paste the key into the **Key** field. or • **Upload new option file** **:** Press to upload a new option from the computer to the receiver. Opens the File upload page.
Delete	Press to delete the option file.
Install	Press to install the option file.

Delete option key	
Option	All options currently installed on the receiver are listed. Press icon to delete an option.

GR/GM Receiver options

Article number	Option	Description
774428	GRL107, RINEX	Enables RINEX logging.
774429	GRL108, Extended formats	Enables BINEX / CMR / CMR+ streaming.
774430	GRL109, 2-20Hz logging and streaming	Enables logging and streaming data with up to 20Hz.
774432	GRL111, FTP Push	Enables FTP Push.
774435	GRL114, Site Monitor	Enables configuration of incoming real time correction data streams for obtaining a phase fixed position. This can be used to detect displacements of the antenna in real time.
774436	GRL115, Multi-Client and Ntrip Caster	Enables Ntrip caster functionality and Multi-Client connections with up to 10 client connections per data stream (TCP/IP server setup).
778851	GRL116, Wake-up	Enables the wake-up functionality.
778852	GRL117, Extended OWI	Allows external OWI software to connect and send commands.
779041	GRL118, Demonstration	Timed Demonstration License.
805687	GRL120, WLAN	Only available for GR25/50 with WLAN radio integrated. Allows using WLAN to connect to a network or allow connections from other WLAN devices.
835566	GRL124, Velocity & Displacement Engine	Enables the Velocity & Displacement Engine

Receiver Options: GR10/25 and GM10 receivers only

Article number	Option	Description
774411	GRL100, GPS L5	Enables GPS L5 tracking.
774422	GRL101, GLONASS	Enables GLONASS L1+ L2 tracking.
774424	GRL103, Galileo	Enables Galileo, E1,E5a, E5b and AltBOC tracking.

774426	GRL105, BeiDou	Enables BeiDou tracking.
774431	GRL110, 50Hz logging and streaming	Enables logging and streaming data with up to 50Hz. Requires 774429 GRL109.
782366	GRL119, Dual frequency	Enables dual frequency tracking.
812237	GRL121, QZSS	Enables QZSS L1+ L2C tracking.
812238	GRL122, QZSS_L5	Enables QZSS L5 tracking.

Receiver Options: GR30/50 and GM30 receivers only

Article number	Option	Description
842484	GRL200, Multi-Frequency	Enables multi-frequency tracking.
842486	GRL202, Galileo	Enables Galileo tracking.
842488	GRL203, BeiDou	Enables BeiDou tracking.
842489	GRL204, QZSS	Enables QZSS tracking.
842490	GRL210, 50Hz logging and streaming	Enables logging and streaming data with up to 50Hz. Requires 774429 GRL109.

Related topics

Status: Receiver options
Receiver setup: File upload

Receiver setup: Language management

Background information

The language management page allows selecting which language will be used on the receiver. Only one language can be chosen at a time and the selection is valid for all users.

The default language is English. English will always be used if the provided language file does not contain a translated token. For more information on translating please contact your local Leica Geosystems Dealer/Distributor in the country where you bought your product.

Setting Descriptions

The table below describes the fields in the Languages tab.

Setting	Description
Language	Lists all language files loaded onto the receivers SD card.
Code	A 2 letter abbreviation for the language file.
Release date	The release date of the language file. The English language file is always released with the firmware file. No release date is listed for English.
Version	The version number. ☞ If you install a language version that does not match the installed firmware version, web interface content may become unusable. If a language file other than English is active during firmware upgrade, the language file is deleted and

	the receiver is set to using English. After the firmware upgrade, the language file for the new release firmware must be installed manually.
Delete	Select to delete the language file from the SD card. The default English language file cannot be deleted.
Install	Press to install the language file.

Upload new language file	Press to upload a new language file from the computer to the receiver. Opens the File upload page.

Related topics

Receiver setup: File upload

Receiver setup: Receiver settings backup

Background information

The Receiver settings backup page lists all receiver setting files loaded onto or stored on the receivers SD card. A receiver settings file contains the complete system configuration of a GR/GM receiver.

With the backup functionality the receiver settings can be stored for archiving or the file can be used on other GR/GM receivers if the configuration is to be the same on several receivers. The system configuration is stored in a zipped file.

The receiver will always create a backup of the current receiver settings before installing a new receiver settings file. In case the installation of the new receiver settings file fails, this backup file is listed in the **Available receiver settings** list. This allows reverting to the old settings.

Please check the event log after installing a receiver settings file. The event log will show if the installation was successful.

Setting Descriptions

The table below describes the fields in the Receiver settings backup tab.

Setting	Description
Available receiver settings	Lists all receiver setting files loaded onto or stored on the receivers SD card.
Delete	Press to delete the backup settings file.
Download	Press to download the file from the receiver to the computer.
Install	Press to install the settings on the receiver.

Backup current receiver settings	Press to create a backup (.zip file) of the current receiver settings.
Upload new receiver settings	Press to upload a new receiver settings file from the computer to the receiver. Opens the File upload page.

File upload

1. Press **Browse...** to select the new option, language, antenna, receiver configuration or firmware file from the computer.
2. Press the upload icon to complete the upload of the new file from the computer to the receiver.

Support

Support: Overview

The Support menu options allow you to send the settings of your receiver and debug information to Leica NRS support in order to help solve receiver problems.

Menu option	Description
Properties	Activate the automatic sending of dump file to NRS support, in the case that the receiver detects a problem.
Support tool	Enter a support case and send to NRS support with a file containing the receiver configuration and settings.
Leica Active Assist	Allow access to your receivers web interface by Leica support staff.
Links	A list of helpful links.

Support: Properties

Background information

Activate the automatic sending of dump files to Network Reference Stations support when the receiver detects a problem.

The FTP push to Leica NRS support only works if there is an active connection to the internet. If the internet connection is down, and the FTP push fails, then the dump files can be found in the **Transfer / Settings** folder on the SD card.

Setting Descriptions

The table below describes the settings that can be configured on the Properties page.

Support tool	Description
Automatic mode	Select to activate Automatic mode. If activated and the receiver has a problem while operating, it will automatically retrieve the necessary information and send it via FTP push to NRS support. Please note that no email is sent to NRS support. The pushed files are checked by the NRS team on a regular basis.
Operator, Company, Country, Email	Enter the details in each field and press . The information will be transferred to the **Support: Support tool** page. If the automatic mode is activated then these fields must be filled in.

Leica support access	Description
Enable Leica support access	Activate to allow a Leica Support employee access to the receiver's web interface.

Binary data logging	Description

Enable binary data logging	Activate to enable LB2 binary data logging. After a receiver reboot, this setting will be disabled.

Related topics

Support: Support tool
Directory Structure of the Memory Device
Activate Leica support access step-by-step

Support: Support tool

Background information

Enter a support case and send to Network Reference Stations support with a file containing the receiver configuration and settings.

All fields except the **Existing incident ID** field must be filled in before the Support Tool can be used in manual mode.

Setting Descriptions

The table below describes the settings that can be configured on the Support tool page.

Support tool	Description
Operator, Company, Country, Email	Enter the details in each field before sending the support information. If the automatic support tool is active, this information will already be taken over from the Support / Properties page.
Subject	Enter a short description of the support incident.
Description	Enter a detailed description and work flow of the support incident. The more information that is supplied at this stage the quicker we can assist you.
Existing incident ID	Enter the incident ID if a support case already exists for the current receiver problem.

Press the Mail icon to send your support question to Network Reference Stations support.

Make sure that the outgoing SMTP port 25 is open to allow the receiver to connect to the Leica Geosystems SMTP server.

In the case that the Leica SMTP server cannot be reached, e.g. due to network connectivity issues on the reference site, the zip file containing the receiver settings can be downloaded from the **Transfer / Settings** directory on the SD card. After the manual download to the local PC the file can be sent via email to Leica NRS Support.

Related topics

Support: Leica Active Assist

Background information

During a support incident you may be asked by Leica support staff to connect to **Active Assist**.

Active Assist allows access to your receiver's web interface by Leica NRS support staff in a protected network.

Press the **Connect** button in order to initiate the connection to the Active Assist server.

In order to use Active Assist, the following **outbound** ports must be open: 2104, 53000 - 53100.

For using Active Assist the Leica NRS support staff needs to know the serial number of your receiver. This means that Active Assist can only be used if a support incident has been created and the receiver's serial number has been forwarded to Leica NRS support.

Disconnect button
Leica NRS support staff will inform you when the Active Assist session has been finished. Please do not log in during an Active Assist session as this may disrupt the Active Assist connection.
When being connected to Active Assist you can disconnect from the server using the Disconnect button. Please be aware that this will stop any support activities which might be taking place. Please inform Leica support before disconnecting from the Active Assist server.

7: GR/GM Receiver Software

Software: Overview

All receivers use the same software concept.

Software type	Description
GR/GM firmware **(GRxx_x.xx.xxx.fw)** **(GMxx_x.xx.xxx.fw)**	The receivers firmware is called RefWorx. This important system software covers the basic functions of the instrument. The onboard Web interface is integrated into the firmware and cannot be deleted. The English language is integrated into the firmware and cannot be deleted. The firmware can also be installed as a zipped file. The receiver will automatically unzip the file before the installation. For an automatic upload and installation of the firmware, the original file name as released by Leica Geosystems must not be changed.
Language software **(REF_LANG.sxx)**	Various languages are available for the web server. Language software is also referred to as system language. English is the default language and cannot be deleted. Many different language files can be loaded onto the SD card but only one language is chosen at a time as active language. ☞ During a firmware upgrade the receiver reverts to English and all language files are deleted. After the upgrade load the new language version as needed.

Software upload

Software for	Description
All GR/GM receivers	All software is stored in the System RAM of the instrument. A new firmware file must be uploaded to the SD card before installation. The file can be uploaded via: • the Web interface. • direct copy to the SD card using a computer. • direct FTP access to the SD card. After uploading, the firmware must be transferred from the SD card to the System RAM via the Web interface. For detailed step-by-step instructions, refer to Firmware upgrade step-by-step. Leica GNSS Spider can also be used to install the firmware. Loading the firmware to the SD card and installing it on the instrument is done in one step when using GNSS Spider. Refer to the **Leica GNSS Spider Online Help** for more information.

Receiver Information

Important information regarding the instrument details, installed options and firmware can be found on the **Status / Receiver Information** page on the Web interface.

Related topics

Is my firmware up to date?
Firmware upgrade step-by-step
Firmware upgrade using Leica GNSS Spider
Loading a Language file
Status: Receiver Information
Receiver setup: Firmware management
Receiver setup: Language management

Is my firmware up to date?

If a GR/GM receiver is connected to the internet, the web interface automatically notifies the user if a new firmware version becomes available. This message appears in the following places:

- in the **Event log**
- on the **Status / Receiver Information** page
- on the **Receiver Setup / Tools / Firmware** page

The Firmware management page allows the user to download the latest available firmware file to the computer to use for an upgrade of their GR/GM receivers.

When the automatic firmware upload and installation is activated, the receiver will install the new firmware version as soon as it becomes available.

Related topics

Software: Overview
Firmware upgrade

Status: Event log
Status: Receiver Information
Receiver setup: Firmware management

Firmware upgrade step-by-step

Manual firmware upgrade
Automatic firmware upgrade

Manual firmware upgrade

Follow these steps to complete a firmware upgrade.

Step	Description
☞	**Please ensure that there are no power interruptions during the firmware upgrade!**
1	Maintenance End Check
2	Obtaining the new firmware
3	Copy Firmware File to the SD Card
4	Install the firmware

1: Maintenance End Check

The firmware is protected and can only be loaded onto instruments with a valid firmware (software) Maintenance. To check the Maintenance End date, open the Web Interface and go to the **Status / Receiver Information** page.

If the Maintenance End date shown is later than in the corresponding release notes, then this firmware can be loaded.

If the Maintenance End date is no longer valid, then please contact your local Leica Representative to learn about Customer Care Packages (CCPs) that include software maintenance so that you can benefit from the latest software improvements.

2: Obtaining the new firmware

The firmware can be obtained in the following ways:

- using the web link in the receiver's web interface on the **Receiver Setup / Tools / Firmware management** page. This link copies the latest available firmware file to the computer.
- using the MyWorld web portal: https://myworld.leica-geosystems.com/irj/portal
- on a digital storage device from a local Leica Selling Unit or Dealer

3: Copy Firmware File to the SD Card

The firmware must be uploaded to the SD card before installation. The file can be uploaded via:

The Web Interface

Step	Description
1	Go to the **Receiver Setup / Tools / Firmware** page.
2	Click the **Upload new firmware file** button.
3	Click the **Browse…** button and select the new firmware file.
4	Click the **Upload** button to copy the file to the SD Card.
5	You will be directed back to the **Firmware management** page once the file upload is complete.

Using a FTP client

Step	Description
1	Open an FTP client such as Windows Explorer or any other software capable of establishing an FTP connection.
2	Enter the **IP address (hostname)** of the receiver and the username and password of a user with FTP server read/write access.
3	Copy the firmware file into the **Transfer / Firmware** folder on the SD Card.

SD Card reader

Step	Description
1	Insert the SD card into your PC or a SD Card reader.
2	Copy the firmware file into the **Transfer / Firmware** directory on the SD Card. This can be done with Windows explorer or any other PC software.
3	Insert the SD card into the receiver and turn on the instrument.

4: Install the firmware

After uploading, the firmware must be transferred from the SD card to the System RAM via the Web interface.
Prior to starting the installation, ensure that the receiver is connected to a reliable power supply.

Step	Description
1	Go to the **Receiver Setup / Tools / Firmware** page.
2	The loadable firmware file will be shown in the table.
3	Click the **Install** button to install the new firmware. This may take several minutes.
4	The receiver will automatically reboot following the installation of the new firmware and you will be directed to the **Log in** page.
5	To verify if the installation was successful go to the **Status / Receiver Information** page and view the installed firmware versions.

Automatic firmware upgrade

The GR receivers allow the firmware upload and installation to be done automatically by the receiver. The receiver will check a defined location (Leica Geosystems web server or a user defined FTP location) for new firmware versions. If a new firmware version is available, the receiver will download the file from the defined location to its SD card and install the downloaded firmware file at a defined time.

Step	Description
	Please ensure that there are no power interruptions during the firmware upgrade!
1	Maintenance End Check
2	Automatically obtaining the new firmware
3	Automatically installing the firmware

1. Maintenance End Check

The firmware is protected and can only be installed onto instruments with a valid firmware (software) Maintenance.

If automatic download of the new firmware file from Leica Geosystems is configured, the maintenance date is checked before the download is started. If the installed maintenance date is not valid, an event log message will be shown and the firmware will not be downloaded

If automatic download of the new firmware file from a user defined FTP location is configured, the maintenance date is not checked before the download is started. The receiver will check the validity of the maintenance date during installation of the file and will show an event log message if the installed maintenance date is invalid.

If the Maintenance End date is no longer valid, then please contact your local Leica Representative to learn about Customer Care Packages (CCPs) that include software maintenance so that you can benefit from the latest software improvements.

2. Automatically obtaining the new firmware

For an automatic download of a new firmware file onto the receivers SD card, the following options can be configured.

- Download the latest file from Leica Geosystems. This option copies the latest available firmware file to the SD card of the receiver as soon as it has been published by Leica Geosystems. A valid maintenance key must be installed on the receiver in order to obtain the file automoatically.

Step	Description
1	Go to the **Receiver Setup/ Tools / Firmware** page.
2	Activate the **Download automatically** check box.
3	Make sure the **Download from** list box is set to **Leica Geosystems**.
4	Click the **Save** button to store the settings. The receiver will check every 24 h for a new firmware file.

- Download a firmware file from a user defined FTP server. This option copies a firmware file to the SD card of the receiver as soon as it has been made available at a user defined FTP location. The maintenance data is not checked before starting the file download. The FTP location can be defined in GNSS management - FTP locations. The new firmware file must be copied to this location by the user in order to trigger the automatic download.

Step	Description
1	Go to **GNSS management / FTP and USB locations**
2	Create a new FTP location.
3	Load the latest firmware file to this FTP location. Make sure the file naming is exactly as released by Leica Geosystems.
4	Go to the **Receiver Setup / Tools / Firmware** page.
5	Activate the **Download automatically** check box.
6	In the **Download from** list box select the new FTP location.
7	Click the **Save** button to store the settings. The receiver will check every 24 h for a new firmware file at this FTP location and download the file when available.

3. Automatically installing the firmware

After automatically or manually uploading the firmware to the SD card, the firmware can be installed automatically.

There are two options for a timed installation of the new firmware.

- Install the firmware immediately after upload. This option is only available if the upload of the firmware to the SD card is also done automatically. Once the upload is finished, the installation of the firmware is started by the receiver.
- Install the firmware at a specified time. This option is available independent of the firmware upload option. When activated, the receiver will check every 24 hours if a new firmware is available on the SD card. If a file is detected on the SD card, the installation is started at a specified time. The user can set the day of the week and the time on that day at which the firmware is to be installed. E.g. choosing Saturday and 23:00 will install the firmware at 23:00 the next Saturday after the firmware was found on the SD card. The option "same day" will install the firmware at the specified time of the day the new firmware was found on the SD card, independent of which day of the week it is.

When using the automatic firmware installation, make sure that the receiver is connected to a reliable power supply.

If the firmware installation fails, e.g. due to an expired maintenance date, an event log message is given. Please check the event log if the firmware was not upgraded as expected.

For every firmware upgrade, the language will be deleted and the language is reverted to English. After an automatic firmware upgrade, the language file needs to be loaded and installed manually.

Step	Description
1	Go to the **Receiver Setup / Tools / Firmware** page.
2	Activate the **Install automatically** check box.
3	Select the time of the installation: Select **after automatic download** if **Download automatically** is activated and the firmware is to be installed as soon as the download to the SD card is finished. OR Select a day of the week and time at which a firmware file is to be installed after it was found on the SD card.
4	Click the **Save** button to store the settings. The receiver will wait for a finished file download or the specified day and time to start the firmware installation.

Related topics

Software: Overview
Is my firmware up to date?
Firmware upgrade using Leica GNSS Spider
Loading a Language file

Status: Receiver Information
Receiver setup: Firmware management

Firmware upgrade using Leica GNSS Spider

Leica GNSS Spider can also be used to install the firmware. Loading the firmware to the SD card and installing it on the instrument is done in one step when using GNSS Spider.

Step	Description
1	Open the **Leica GNSS Spider Site Server** and select the **Site tab**.
2	Right click on the **receiver site** and choose **Firmware upgrade**.
3	Select the firmware file to be uploaded and press **Upgrade**.
4	**Leica GNSS Spider** will automatically upload and install the new firmware and then reboot the sensor. A message will appear in the **GNSS Spider Watch View** to confirm that the upgrade was completed successfully.

For further information, refer to the Leica GNSS Spider Online Help.

Related topics

Software: Overview
Firmware upgrade

Loading a Language file

The system software enables multiple languages to be stored on the SD card. Only one language can be activated at a time.

Follow these steps to upload a new language file:

Step	Description
1	Go to the **Receiver Setup / Tools / Languages** page in the GR/GM receiver Web interface.
2	Click, **Upload new language file**
3	Click the **Browse…** button and select the new language file .
4	Click the **Upload button** to copy the file to the SD Card .
5	You will be directed back to the **Language management** page once the file upload is complete.
6	Click the **Install** button next to the desired language in the table.

Related topics

Software: Overview
Receiver setup: Language management

8: GNSS Spider / Remote Access

GNSS Spider / Remote Access: Overview

Menu option	Description
GNSS Spider / Remote Access	An overview of the GNSS Spider, remote access process and the requirements that are required.
GNSS Spider <-> GR/GM configuration	An overview of how settings are stored on the receiver when using GNSS Spider.
GNSS Spider logging session	An overview of GNSS Spider logging sessions.
GNSS Spider data streams	An overview of GNSS Spider data streams.

GNNS Spider / Remote Access

Overview

By default, no port on the GR/GM receivers is open for remote access from any OWI software. In order to allow OWI access, a port must be defined and opened.
The OWI software can then change the receiver configuration and define and start data streams and a logging session.
In order to use any non-Leica OWI software with a GR/GM receiver, an option key is required.

Spider and remote access

The **Receiver setup: Spider and remote access** page lists all ports on the GR/GM receiver that are open for any OWI based tool to connect to the instrument and change the settings via OWI commands.

The page also allows creating new OWI ports and editing or deleting configured ports.
Access to the GR/GM receiver can be configured via

- TCP/IP server connection
- TCP/IP client connection
- Serial port
- Modem
- Radio

It is also possible to connect a GR/GM receiver to the GNSS Spider site server via a USB or Bluetooth PAN connection. In this case, the connection will be handled like a network connection via an Ethernet cable.

Please see the chapter Spider and remote access: Overview for more detailed information on how to configure a remote access.

Licensing

Leica GNSS Spider users do not need a license to connect the GR/GM receiver as an active site to the Leica GNSS Spider software.

Requirements

- GR10/30: Leica GNSS Spider v4.0 or later must be installed.

- GR25/50: Leica GNSS Spider v4.2 or later must be installed.
- GM10/30: Leica GNSS Spider v4.3 or later must be installed.

Any non-Leica OWI based software requires the **GRL117 Extended OWI** license installed on the GR/GM receiver to be allowed to change any configuration on the receiver.

If the **GRL117 Extended OWI** license is not available on the GR/GM receiver, then a remote port can be configured and activated but can only be used by Leica GNSS Spider.

To check the currently installed licenses on the receiver, go to **Status / Receiver Information**.

- The Receiver tab lists the GNSS Spider OWI option as default functionality.
- The Licenses tab shows if the extended OWI option is installed on this receiver.

Related topics

GNNS Spider <-> GR/GM Configuration
GNSS Spider logging session
GNSS Spider data streams

GNSS Spider <-> GR/GM configuration

When working with a GR/GM receiver and an active connection to Leica GNSS Spider, the settings on the receiver can be changed from either side. The last stored/uploaded settings will overwrite everything that had been configured before.

Starting and Stopping the active GR/GM receiver site in Leica GNSS Spider has only an effect on the __**spider** logging session and the GNSS Spider data streams in the receiver.
It activates or deactivates the logging session and deletes or creates the data streams. All other logging sessions and data streams are not affected by a start or stop of a GR/GM receiver GNSS Spider site.

When the user selects **Upload settings** in the Leica GNSS Spider software, all settings configured for this site are uploaded to the connected receiver. Since this includes tracking settings, changes of the site code and the receiver coordinates, logging and streaming is interrupted every time the GNSS Spider configuration is loaded onto the GR/GM receiver.

For advanced information refer to the Leica GNSS Spider Online Help.

Related topics

GNSS Spider logging session
GNSS Spider data streams

GNSS Spider logging session

MDB logging on GR/GM receivers can be configured and started from GNSS Spider via an active site.
Please see the **GNSS Spider online help** for more information on how to configure an active GR/GM site.

Only one logging session can be configured and started from GNSS Spider.

When logging is configured in GNSS Spider and the settings have been uploaded to the receiver, a GNSS Spider logging session appears in the **GNSS management / Logging sessions** page and in the **Status / Logging sessions** page.

The Spider logging session is called **__spider** (with two _) and is activated by starting the site in GNSS Spider.

Per default the logged MDB data is stored in the folder **Data__spider** on the receivers SD card. This folder can be changed in the web interface configuration. GNSS Spider will still be able to download the files.

Please note that a GNSS Spider logging session is always created with the priority setting high. This means that if other logging sessions, created via the web interface, are running on the receiver and **Smart clean up** is activated, the priority setting of the GNSS Spider site guarantees that the data for this site will be protected before lower priority logging sessions on the receiver.

Logging sessions created in GNSS Spider and uploaded to the receiver can be deactivated by stopping the site in GNSS Spider or by pressing the deactivate button in the web interface of the GR/GM receiver.

GNSS Spider data streams

Two real time and one raw data stream can be configured on the receiver from an active GNSS Spider site at the same time.

A data stream configured in GNSS Spider is only visible and active on the receiver when the according site in GNSS Spider is started. When the site is stopped, the data streams are deleted from the receiver. No data streams can be deactivated from GNSS Spider on the GR/GM receiver.

Data streams created in GNSS Spider and uploaded to the GR/GM receiver can however be deactivated in the web interface of the receiver.

9: How to

How to: Overview

The following topics provide detailed step-by-step guides to help you configure your receiver:

- How to set up a mobile internet connection
- How to use DynDNS service on receiver
- How to backup and restore receiver settings
- How to configure an NTRIP data stream
- How to configure FTP push of logged data
- How to reset the receivers settings
- How to configure a Wake-up session
- How to use Bluetooth on the GR25

How to set up a mobile Internet connection

Background information

The mobile Internet setup is used to connect a GR/GM receiver to the Internet when no direct LAN connection is possible. A GPRS enabled device is necessary to establish this connection.

Before you begin

In order to connect to the Internet from a GR/GM receiver, it is necessary to apply for an APN (access point name) at your Internet service provider.

Together with the APN, a profile must be assigned to you. This profile is a list of all ports that are open and available for use. It needs to be activated for each SIM card you want to use for a mobile Internet connection.
When using Email and FTP push, make sure that the relevant SMTP and FTP ports are open. For DynDNS service, either port 80, 8245 or 443 also have to be available. The profile also needs to contain the IP of at least one DNS server that is run by your provider if you want to use DynDNS

Step-by-step

Step	Description
1	Connect a **GPRS device** to the serial or slot-in port of the receiver. For more information how to connect a device go to External devices / Working with Radio, Modem and GSM devices / Slot-in devices.
2	Open the receiver's web interface. Check that the event log states that the GPRS device has been detected.
3	Go to **Receiver setup / Network connections**. Open the mobile Internet tab.
4	Select the **GPRS device** from the drop down list. If the used device is not available in the list, open **Device management** to create a new, user defined device. For more information on creating a new device see Device Management: New / Edit modem/phone device.
5	Enter the **PIN code** of the used SIM card. If the SIM card PIN is disabled, this field can be left blank.
6	Enter the **APN**, the **user name** and the **password**.
7	If a dynamic IP address is used, leave the IP address field set to dynamic. If you have a static IP address,

	select static and enter the IP address.
8	Activate the **Use as default gateway** check box if all data traffic is to be done via the mobile Internet connection. If activated, all FTP push, streamed data, event email sending and DynDNS updates are done via the mobile Internet connection.
9	Press Save changes. The mobile Internet configuration is now stored. Check the **Event log** and the **Status / Network connection** page to make sure the mobile internet connection is successfully established.
	Please note: The APN profile used for the mobile Internet setup might make it necessary to change the http port if the default http port is not available. If the http port has been changed, the web interface access then requires entering the http port with the receivers hostname in the browser window. (e.g. http://my_receiver.org:5689)

Related topics

Slot-in devices
Device Management: New / Edit modem/phone device
Status: Network connections

How to use DynDNS service on the receiver

Background information

The DynDNS functionality allows clients to use an Internet domain name to address a receiver with a dynamic IP address.
The typical use case for this functionality is a receiver with an Internet connection via GPRS. In this setup the GR/GM receiver will have a different IP address every time the Internet connection is established.
Another use case is a receiver behind a router in a local network, where the router is connected to the Internet and regularly gets an updated IP address. The receiver will check every 12min for a new IP address on the router and updates the DynDNS settings when necessary.

Before you begin

Register at a DynDNS service: Go to http://www.dyndns.com or http://www.no-ip.com or http://www.Two-DNS.com and register for an account. At registration enter the hostname you want your receiver to be accessed with. Enable wildcard use. Mail exchanger functionality is not necessary.

Step-by-step

Step	Description
1	Attach and configure a mobile internet device. Please see Network connections: Mobile internet on how to configure the mobile internet device.
2	Open the receiver's web interface and go to **Receiver setup / DynDNS**.
3	Select the DynDNS service you have registered your account with from the list.
4	Enter the hostname that you entered when registering for a DynDNS account.
5	Enter the user name and password that you entered when registering for a DynDNS account.
6	Press Save changes. The DynDNS settings are now stored. Check the event log and the **Status / Network connection** page to make sure the current receiver IP address is successfully updated at the DynDNS service.

☞	The APN profile used for the mobile Internet setup might make it necessary to change the HTTP port if the default HTTP port is not available. If the HTTP port has been changed, the web interface access then requires entering the HTTP port with the receivers hostname in the browser window. (e.g. http://my_receiver.org:5689)

How to backup and restore receiver settings

Background information

If several receivers are to be used with the same configuration, with differences in the coordinates and IP settings only, it would be convenient to not have to type in these settings into every receiver.
For any use case that requires the same receiver configuration to be installed more than once, the backup and restore functionality saves a lot of time and effort.

Before you begin

Installing the same receiver functionality on more than one receiver via the restore function also sets the same communication settings on all receivers. If the receivers are then all connected to the same network, the same IP and hostname may connect to any of the available receivers. Make sure that the communication settings are clearly dedicated for each receiver.

☞ Access management is overwritten with the access settings stored in the backup file when installing a new set of receiver settings. Make sure that the access settings stored in the backup file are known, in order to prevent being locked out of the web interface.

Step-by-step backup receiver settings

Step	Description
1	Open the receiver's web interface in a browser window by typing in the receivers IP or hostname.
2	Go to **Receiver setup / Tools** and open the **Receiver settings backup** tab.
3	Press **Backup current receiver settings** . The receiver now collects all receiver configuration information and stores it in a zipped backup file.
4	The backup file is now listed on the Receiver settings backup page. Press Download to download the file to your PC. It can then be used to install the same settings on another receiver or archived for later use.
☞	The file name contains the date and time of the file being created and the receiver's serial number. This simplifies keeping track of archived receiver backup files.

Step-by-step restore/install receiver settings

Step	Description
1	Open the receiver's web interface in a browser window by typing in the receivers IP or hostname.
2	Go to **Receiver setup / Tools** and open the **Receiver settings backup** tab.
3	Press **Upload new receiver settings** to upload a zip file containing all receiver settings. The file upload page is opened.
4	Use the browse button to find the backup file on your PC. This file can be from the same receiver or from a

	different receiver.
5	Press **Upload** to load the file onto the receivers SD card. Wait until the upload is finished. The file is then listed in the **Receiver settings backup** page.
6	Press the Install icon to install the new receiver settings on the GR/GM receiver or to restore a previous receiver configuration. The receiver will reboot after installing the settings.
7	After the installation, the web interface redirects to the **Login** page. Enter the login details; the **Receiver settings backup** page is opened. **Delete** the backup file if it is no longer needed on the receivers SD card.

How to configure Ntrip

Background information

Ntrip stands for **N**etworked **T**ransport of **R**TCM via **I**nternet **P**rotocol. Developed by the Federal Agency for Cartography and Geodesy of Germany, Ntrip enables the streaming of GNSS data over the internet.

Ntrip is implemented in three system software components: Ntrip client, Ntrip server and Ntrip caster. The Ntrip caster is the actual HTTP server program while Ntrip client and Ntrip server are acting as HTTP clients.

GR/GM receivers can act as:

- Ntrip servers, sending GNSS data to an Ntrip caster. Leica GNSS Spider software can act as a caster. The receiver itself can also act as an Ntrip caster
- Ntrip clients, receiving real time correction data from an Ntrip caster. The Leica Viva rovers can act as an Ntrip client, receiving correction data from an Ntrip caster
- an Ntrip caster, receiving data streams from other receivers or e.g. Leica Spider software on several mount points and distributing this data to different clients. Only one TCP/IP port is needed for the Ntrip caster to receive and distribute multiple data streams

More information on Ntrip is contained in the Glossary topic, Ntrip.

Before you begin

Ntrip is a very easy way to distribute GNSS data to a high number of users via only one single TCP/IP port. GR/GM receivers can act as Ntrip casters, Ntrip clients and Ntrip sources. To use the different Ntrip functionalities on a receiver, follow the Step-by-Step guide below.

Step-by-step

Ntrip caster setup

Step	Description
1	Open the receiver's web interface in a browser window by typing in the receivers IP or hostname.
2	Go to the **Receiver setup / Ntrip caster.**
3	On the **Caster Settings** page • Activate the Ntrip caster by activating the check box. • Enter the port number of the port, the Ntrip sources and clients are to connect to. The default Ntrip caster port is 2101 and already entered.

4	Open the **Mount points** tab.
5	Press the **Create new mount point** to open the mount points wizard.
6	On the **New mount point** page • Enter a unique mount point name • Enter the **Data format** of the stream transmitted via this mount point. This entry will appear in the source table. That way the Ntrip clients can select the correct mount point for the data format they need. • Enter tan **Identifier** for the mount point. This field can be left blank. • Enter the **Navigation Systems** for which correction data is streamed via this mount point. • Enable the **Source password**. An Ntrip server (source) connecting to this data stream to transmit data will need to provide this password for authentication. • Enable **Use client authentication** if the Ntrip clients are to send user name and password before being allowed to receive data from a mount point. User name and password are defined per mount point, not per client. User name and password are therefore the same for all clients connecting to the same mount point.
7	Press the Save button to store the data stream. The receiver will attempt a connection to the Ntrip caster immediately. Check the event log for a confirmation that the connection was successful.

Ntrip server (source) setup

Step	Description
1	Open the receiver's web interface in a browser window by typing in the receivers IP or hostname.
2	Go to the **GNSS management / Data streams**.
3	Press the **Create new data stream** to open the data streams wizard.
4	Select the **Data stream type** you wish to stream via the Ntrip protocol. Then press the Continue icon.
5	Configure the data streams details and press the Continue icon.
6	Select the **Connection type**, **Ntrip server (source)** in the Connection page and press the Continue icon.
7	On the **Configure NTRIP server (source)** page • For **Ntrip caster IP address** enter the IP address of the Ntrip caster the data is to be streamed to. • In the **TCP/IP port** field enter the port at which the Ntrip source can access the mount point on the Ntrip caster. • Enter the **Mount point** name and **password** for the mount point to stream data to. • If data is to be streamed to an Ntrip caster running on the same receiver as this data stream, activate the **Use local caster** check box. This will automatically fill in the IP address and port fields and hide them. It will also show a list of all mount points configured on the local Ntrip caster. Select a mount point from the list or enter the mount point name manually. Mount points on the Ntrip caster can still be created after the data stream has been set up. Then press the Continue icon.
8	Press the Save button to store the data stream. The receiver will attempt a connection to the Ntirp caster immediately. Check the event log for a confirmation that the connection was successful.

Ntrip client setup

Step	Description
1	Open the receiver's web interface in a browser window by typing in the receivers IP or hostname.

2	Go to the **GNSS management / Data streams**.
3	Open the **Incoming data streams** tab.
4	Press the **Create new data stream** to open the data streams wizard.
5	Select the **Real time** in the **Data stream type** list. Then press the Continue icon.
6	On the **Configure real time data stream** page • Select the **RTK data format** to be received. • Select the manufacturer of the **Reference Sensor** the real time correction data is to be received from. This is important when using a reference station receiver from a different manufacturer, as it allows the correct application of GLONASS inter frequency biases. If the Sensor type is not know, this field can be left blank. Some real time formats transmit the receiver type. • Select the antenna type of the **Reference antenna** so the phase centre corrections can be applied correctly. If the antenna type is not known, this field can be left blank. Some real time formats transmit the antenna type. • If network corrections are received, select the type of RTK network corrections to be received so ionospheric and tropospheric modelling will be used for position calculation accordingly. • Enable the sending of NMEA GPUID authentication details if necessary for user authentication with the RTK correction provider. If the field is activated, enter the users' IDs. User ID 1 must be entered when the check box is enabled. User ID 2 is optional. • Select the **Position type** to be calculated depending on the planned application. Please see Configured an incoming data stream for a description of the different position types. Then press the Continue icon.
7	Select the **Connection type**, **Ntrip client** in the Connection page and press the Continue icon.
8	On the **Configure NTRIP client** page • For **Ntrip caster IP address** enter the IP address of the Ntrip caster to receive data from. • In the **TCP/IP port** field enter the port at which the Ntrip client can access the mount point. • Enter the **Mount point** name manually or press the **Get source table** link. Pressing the link will fill the **Source table** list with all mount points available on the configured Ntrip caster. Select a mount point from that list. • Enter the **User name** and **Password** required for client authentication on the mount point. If the mount point does not require authentication, these fields can be left blank. Then press the Continue icon.
9	Press the Save button to store the data stream. The receiver will attempt a connection to the Ntrip caster immediately. Check the event log for a confirmation that the connection was successful.

Related Topics

Glossary: Ntrip
Ntrip caster: Overview
Outgoing data streams wizard: Configure Ntrip server (source)
Incoming data streams wizard: Configure Ntrip client

How to configure FTP push of logged data

Background information

Up to 10 logging sessions can be configured on a GR/GM receiver. Each logging session can push the logged files to a different FTP location. These FTP locations need to be configured before assigning them to a logging session.

Step-by-step configure and FTP push location

Step	Description
1	Open the receiver's web interface in a browser window by typing in the receivers IP or hostname.
2	Go to **GNSS management / FTP locations** and press the **Create new FTP location** .
3	Enter a unique **Name** for the FTP location and the **FTP server hostname** or IP address of the FTP server.
4	Enter the **FTP server port** number at which the FTP server can be accessed (generally this is port 21).
5	Enter the **FTP root directory** if this is not directly accessed when accessing the FTP server. This directory must already exist on the FTP server. It will not be created during the FTP push.
6	Enter **Username** and **Password** to access the FTP server. These fields can be left blank if anonymous access is enabled on the FTP server.
7	In the **Send commands** field, FTP protocol commands can be added that will be executed as soon as the FTP server is accessed. These fields can generally be left blank.
8	It is recommended to keep the **Use passive mode** check box enabled. If active mode is need, disable the check box.
9	Optionally, the entered FTP details can be tested by pressing **Test FTP location** . This will test accessing the FTP server, writing and deleting a file on the server and closing the FTP server connection.
10	Press save changes to store the configured **FTP push location**. This will redirect to the FTP push locations overview page where all configured FTP servers are listed.

Step-by-step use an FTP push location in a logging session

Step	Description
1	Go to **GNSS management / Logging sessions** to create a new logging session or edit an existing logging session.
2	Press the **Create new Logging session** or **Edit logging session** to open the logging sessions wizard.
3	Enter all necessary logging details or changes.
4	Press the Continue icon.
5	Define if the files should be zipped by activating or deactivating the **Zip files** check box.
6	Choose a directory naming convention defining how the logged data will be stored onto the SD card.
7	Open the **Choose FTP location** list box. It lists all FTP push locations configured on the receiver. Select an FTP location.
8	Open the **Delete files** list box if automatic file delete is to be used. Select the **After archiving** option to delete the files on the SD card after they have successfully been pushed to the FTP location.
9	Press the Continue icon.
10	Activate the logging sessions and store the settings. This will redirect to the logging sessions overview page where all configured logging sessions are listed.
☞	On the **GNSS management / FTP locations** page, the Queue column lists the number of files queued to be pushed to this FTP location. Generally this is listed as 0. If there is a problem with the FTP location (e.g. the

	FTP server is not accessible), a message will be displayed in the event log and the Queue column will list the number of files that could not be pushed.

How to reset the receivers settings

Background information

The receiver has different reset functionality. It allows

- deleting old data,
- restarting the receiver configuration from scratch or
- deleting almanac and ephemeris for special tracking applications.

Step-by-step format the SD card

Step	Description
1	Make sure the SD card is inserted in the receiver.
2	Open the receiver's web interface in a browser window by typing in the receivers IP or hostname.
3	Go to the **Receiver setup /Tools** page.
4	Press the Format SD card icon to start the formatting.
	Formatting the SD card will stop all active logging and streaming and reboot the receiver. Active data streams and logging sessions will resume after the reboot.

Step-by-step format the receiver settings

Step	Description
1	Open the receiver's web interface in a browser window by typing in the receivers IP or hostname.
2	Go to the **Receiver setup /Tools** page.
3	Select **Reset all** in the **Format receiver settings** list box if all settings are to be deleted or select Keep communication settings (default) if all communication related settings must not be deleted.
4	Press the Format receiver settings icon to set the receiver settings back to factory default.
	If Reset all is selected, remote access to the receiver is not possible anymore unless the receiver is connected to a DHCP network. If the receiver is in a DHCP network it is still accessible via the default hostname (GRxxxxxxx, where xx is the serial number of the receiver).
	When formatting the receiver settings, all logging sessions are deleted but the according files on the SD card are not deleted. The files on the SD card must be deleted manually. If **Keep communication settings** is selected, the following receiver settings will not be overwritten: • Spider and remote ports • Network connections – Ethernet • Network connections – mobile internet • Network connections -Bluetooth • DynDNS settings • Web server settings • Device used for mobile internet setup (changed default devices and user defined devices)

Step-by-step initialize measurement engine

Initializing the measurement is mainly useful for special tracking applications. E.g. if unhealthy satellites are forced to healthy and then set back to automatic health setting, it is recommended to initialize the measurement. Satellites with bad health may transmit incorrect almanacs and ephemeris.

Step	Description
1	Open the receiver's web interface in a browser window by typing in the receivers IP or hostname.
2	Go to the **Receiver setup / Tools** page
3	Press the Initialize measurement engine icon to delete the almanac and ephemeris.
☞	The receiver will stop tracking satellites and lose the navigated position. It takes several minutes for the receiver to start tracking again and regain a navigated position.

How to use Bluetooth on the GR25/50

Background Information

When the Bluetooth device on the GR25/50 is enabled, it can be used in two ways: either as an additional serial port or like a TCP/IP connection to a local (Ad Hoc) network.

☞ The GR25/50 can be ordererd as a Bluetooth or a WLAN version. Bluetooth functionality can only be used on GR25/50 with the Bluetooth radio installed.

☞ The Bluetooth name that the GR25/50 is detected with is always equal to the hostname configured in the Receiver setup: Network connections, Ethernet tab.

Bluetooth serial connection

The Bluetooth connection can be used to provide an additional serial port to be configured on the receiver. To configure a data stream via Bluetooth serial port, select Bluetooth from the list of available connection types.
Once the data stream is configured, external devices will be able to detect the serial connection on the Bluetooth port and connect to the data stream.

Bluetooth Ad Hoc network

The Bluetooth connection can be used to establish a subnet in which the receiver can be accessed like via a TCP/IP connection. This would allow web interface access, data streaming via TCP/IP ports, FTP push or GNSS Spider access within the subnet.

In order to use this connection, the user must establish a Bluetooth network on their PC and assign the IP address **192.168.253.x** and subnet mask **255.255.255.0**. Following the pairing of the Bluetooth device, the GR25/50 receiver can be accessed via the IP address **192.168.253.2**.

☞ When the Bluetooth device is disabled, all configured connections/data streams will still be enabled but not usable, as no connection to the Bluetooth ports will be possible.

Before we begin

This step-by-step guide is for users wishing to enable the Bluetooth connection to the GR25/50.

Make sure the Bluetooth adapter on the PC is enabled and properly installed.

Step-by-Step

Step	Description
1	Enable the Bluetooth adapter of the GR25/50 using either: a. by using the web interface: Open the web interface and select **Receiver Setup / Network Connections** and select **Bluetooth** b. or by using the display and buttons: Go to **Configuration / Network Config** and then select **Bluetooth**, make sure that Bluetooth is shown as "Enabled".
2	In Windows, go to the ***Start*** menu and select **Control Panel / Network Connections**.
3	In the Bluetooth Network Connection menu right click and select **Properties**.
4	Use the following IP address: • IP: 192.168.253.x e.g. 192.168.253.11 • Subnet mask: 255.255.255.0 Click "**OK**" Note: The last part of IP should be a number great than10 to avoid conflicts with other Bluetooth devices.
5	Add the GR25/50 as new Bluetooth device. To do this either: a. Right click the **Bluetooth icon** in the task bar and select "**Join a Personal Area Network**" b. or go to **Settings / Network Connections** and select **Bluetooth Network Connections**
6	Select "**Add...**"
7	Tick the checkbox Click on "**Next**"
8	Select the receiver you want to connect to from the list of Bluetooth devices Click on "**Next**"
9	Enter the pairing code by selecting the option "**Let me choose my own passkey**" Enter default pairing code "0000" or the custom code if already configured on the Bluetooth page of the GR25/50 web interface Click on "**Next**"
10	Confirm the confirmation message and finalise the Bluetooth wizard. Click on "**Finish**"
11	Select the GR25/50 within the list of paired Bluetooth devices. Select "**Connect**". The Bluetooth LED on the GR25/50 should now turn blue.
12	Open a browser and enter: 192.168.253.2, this will load the login page of the web interface. Use the default Admin account or a custom account to log in.

How to use WLAN on the GR25/50

Background Information

When the WLAN adapter on the GR25/50 is enabled, two different modes can be configured.

Use Ad hoc mode for a direct WLAN connection to another wireless device. Ad hoc mode is mainly intended for initial receiver set-up and for checking the receiver settings using a mobile device.

Use Infrastructure mode to connect to a WLAN access point. Infrastructure mode is intended for all communication between the GR25/50 and a computer connected to the same network.

The GR25/50 can be ordered as a Bluetooth or a WLAN version. WLAN functionality can only be used on GR25/50 with the WLAN radio integrated and the GLR120 WLAN option installed.

The Step-by-Step description for an Ad hoc connection below describes a connection to the GR25/50 default profile. For connecting to a user defined profile, change the settings accordingly.

Ad hoc connection Step-by-Step

Step	Description
1	Enable the WLAN adapter of the GR25/50 using either: a. the web interface: Open the web interface and select **Receiver Setup / Network Connections** and select **WLAN** b. or by using the display and buttons: Go to **Configuration / Network Config** and then select **WLAN**, make sure that wireless radio is shown as "enabled".
2	Make sure that the WLAN adapter of your PC is enabled. It may be necessary to use a hardware or software switch.
3	Select the option to create a new network.
4	Select wireless ad hoc (computer - to - computer) network.
5	Enter the receiver's serial number for the network name. Choose the security type to be “No authentication (Open)” and leave the security key field blank. Save the settings.
6	Right click on the WLAN Network Connection and select **Properties**.
7	Select “Internet Protocol Version 4 (TCP/IPv4)” and click the **Properties** button.
8	Use the following IP address: • IP: 192.168.252.x (e.g. 192.168.252.11) where “x” is a value between 1 and 255 (but not 2 as this is the IP address of the default WLAN profile of the GR25/50) • Subnet mask: 255.255.255.0 Click "**OK**"
9	In the Control Panel, open the Windows Mobility Center, find the new wireless connection and right click. Select "Connect".
10	Open a browser and enter: 192.168.252.2, this will load the login page of the web interface. Use the default Admin account or a custom account to log in.

Infrastructure connection Step-by-Step

Step	Description
1	Enable the WLAN adapter of the GR25/50 using either: a. the web interface: Open the web interface and select **Receiver Setup / Network Connections** and select **WLAN**

	b. or by using the display and buttons: Go to **Configuration / Network Config** and then select **WLAN**, make sure that wireless radio is shown as "enabled".
2	In the GR25/50 web interface, go to **Receiver Setup / Network connections / WLAN.**
3	Press Create new WLAN profile to open the **New WLAN profile** page.
4	Enter a unique name for the new WLAN profile. Enter the **SSID** for the network to connect to or press Find wireless network to search for available wireless networks. In **Network infrastructure** select “Infrastructure” mode and the correct authentication and encryption type as defined for the network to be connected to. Enter the correct network key.
5	Check if the access point is configured to assign an IP address automatically. If this is the case, make sure **Obtain an IP address automatically** is activated. If the access point router does not assign IP addresses automatically, deactivate **Obtain an IP address automatically** and enter the correct IP settings. Press to save the settings and return to the **Network connections** overview page.
6	Press Connect to connect to the new WLAN profile.
7	Enter the receiver's hostname or IP address in a browser window to access the web interface.

How to: Backup communication

Background information

To make sure that outages on your primary communication line do not result in data loss or loss of connection to the web interface, a backup communication line can be configured. The Enable backup communication check box on the Network connections - General page enables the "dead gateway detection"; meaning it constantly checks if the primary connection line is still working and switches to the backup communication line if needed and back as soon as the primary communication line is available again.

In most cases Ethernet will be used as default communication line and a mobile internet connection as backup. If available, WLAN can be used in the same way.

Before you begin

Read the How to set up a mobile internet connection guide to make sure the mobile internet connection is working correctly.

Below step-by-step guide will guide you through a setup using Ethernet as the primary gateway and mobile internet as the backup communication line.

For the backup communication to work it is important that the device accessing the receiver is not in the same subnet as the receiver. A routing table will always prefer the "shortest" connection for data transmission. If the backup communication line leads to an IP address in the same subnet, this will overwrite the gateway priority configured in Network connections - General and the backup communication line will always be used when connected.

If the Enable backup communication check box on the Network connections - General page is not enabled, the secondary gateway will be used when the primary gateway is not available anymore but a switch back to the primary communication line will not be done.

Step-by-step

Step	Description
1	Connect the receiver to the internet via an Ethernet connection.
2	Set up a mobile internet connection in parallel. Read the How to set up a mobile internet connection guide

	for further information. If using DynDNS, make sure to select the **Interface** to be **Mobile internet** in **Receiver setup / DynDNS.**
3	Go to **Receiver setup / Network connections**. Open the General tab.
4	Make sure in the default gateway **Priority** list, the Ethernet is listed on the top and the mobile internet is second. **Enable** the Backup communication check box.
5	Press Save changes.
6	Create a data stream as TCP/IP server in **GNSS management - Data streams** or open an OWI port in **Receiver setup - GNSS Spider and remote access**.
7	Create a Spider site (active or passive). Enter your Ethernet connection details for the primary communication (Edit Site - Sensor comm 1) and the mobile internet details for the backup communication (Edit Site - Sensor comm 2). On the General tab, activate Do fallback to secondary sensor link.
8	Connect the Spider site and check that data is received.
	The backup communication setup works well when Spider is set up to be the TCP/IP client and the receiver is set up as the TCP/IP server. Connections to Spider as the TCP/IP server may not work when switching back from the backup communication to the primary.

Related topics

Network connections: General
Status: Network connections

How to use residential gateway

Background information

The Residential gateway functionality can be used to connect a device without internet access through the receiver to the internet. It uses the receiver's internet connection to establish this setup.
The receiver is connected to the internet via the WAN interface (e.g. Mobile internet, Ethernet or WLAN).
The external device is connected to the receiver via the LAN interface (e.g. Ethernet or WLAN). The receiver therefore acts as an access point. Both, the receiver and the attached device then share the internet connection of the receiver.
The configuration of one possible use case is described in detail below.

Before you begin

Below step-by-step guide will guide you through a setup using mobile internet as the WAN interface to connect to the internet and Ethernet as the LAN interface that has a laptop connected and allows this laptop to share the internet access.

If the mobile internet device is used as WAN interface, it is highly recommended to use an extension cable for the GPRS/UMTS antenna. This will ensure that the signal reception of the mobile network is stable and reliable.

If the residential gateway is in use, it is recommended to monitor the CPU load of the GR receiver as available in the web interface on page Status > System Status. The CPU load mainly depends on the general receiver configuration but is also affected by the network traffic. If the CPU load is constantly higher than 80%, some functionality should be disabled.

Step-by-step

Step	Description
1	Connect the receiver to the internet via a mobile internet connection in. Read the How to set up a mobile internet connection guide for further information.
2	Go to **Receiver Setup / General.** In the Priority list move **Mobile internet** to the top of the list. The Ethernet interface must be the 2nd entry in the priority list.
3	Press Save changes.
4	Check the event log and **Status / Network connections** to make sure the mobile internet connection has been established.
5	Go to **Receiver Setup / Residential** gateway and activate **Enable**.
6	Select **Mobile internet** for **WAN interface** and **Ethernet** for **LAN interface**.
7	Press Save changes.
8	Connect a laptop to the receiver using a crossed Ethernet cable.
	Some Ethernet adapters do not need a crossed Ethernet cable for a direct Ethernet connection. In this case, a regular Ethernet cable can be used.
9	On the laptop Reconfigure the LAN adapter to use static IP address: 192.168.0.4 Subnet mask: 255.255.255.0 Gateway: 192.168.0.3 DNS server: 192.168.0.3
10	Open a browser and type in 192.168.0.3. This will open the receiver's web interface in the browser.
	Use the web server port as configured on the receiver. This port must be open in the APN profile of your mobile internet service provider. The IP address must be extended by this port number if it is not standard port 80, e.g. 192.168.0.3:50000.
11	Check that the laptop has internet access.

Related topics

Receiver setup: Residential gateway

Network connections: General

10. Support resources

Support resources

Background information

For assistance with the receiver we have provided a number of resources that can be used when there are questions or technical problems while setting up and using the receiver.

- Use the **Online Help** to get content based help for the receiver configuration.
- Inform the GR/GM support team of any technical issues via the **Support tool**.
- Allow the support team to access the GR/GM Web Interface via **Active Assist** for quick help
- or visit the **myWorld** portal to keep all software and documentation up to date.

Online help

The online help is accessible via the web interface.

On each web interface page the help icon is available. Clicking this button will open the online help related to the current Web interface page. The help is open in a new browser window. This provides quick assistance for the complete Web interface.

The online help can also be opened via the help link in the web interface menu.

The online help also contains information regarding the hardware, the receiver setup, available support tools and general GNSS receiver information. It also contains a Getting Started section and a How to-guide that can provide help for a more complex setup.

For further information about the online help please read the topic: How to display and use the Online help.

Support tool

The support tool provides comprehensive information about the receivers current status to our support team in the case of a technical problem. This way any issue can be solved quickly. The effort needed from the reference station user in solving the issue can be reduced to a minimum.

The Support tool can be used manually or in automatic mode.

If the user notices an issue with the receiver, an email can be sent to the NRS support team from the receiver. The tool requires entering the identity and contact details of the receiver's operator and a description of the technical issue. When sending the email, the complete system information is stored in a file that is attached to the email. With this bundled information, the NRS support team receives an extensive overview of the current status of the receiver.

The tool can also be set to automatic mode. In this case an email is sent to the NRS support team automatically whenever the receiver detects a technical issue. The user may then be contacted by NRS support regarding the sent information.

Please note that the receiver must be connected to the internet for using the support tool.

For further information about the support tool please see Support: Support tool.

Active Assist

During a support incident a GR/GM user may be asked by the Leica NRS support team to connect to the Active Assist server. Via this tool, the support team can access the receiver's web interface without any security risk on the receiver side. Since the tool does not make it necessary to actually access the protected network environment of the receiver, this is a very secure way of providing support.

In order to use the Active Assist tool, it is necessary to activate the Support user account. This allows access to the receivers web interface. The support team is then able to access the complete receiver information and find the source of any receiver issues.

Please note that the use of the Active Assist tool must be requested from the NRS support team. It will not be possible to assist with any problems that have not been reported to the support team beforehand.

For further information about the support tool please see Support: Active Assist.

myWorld

myWorld@Leica Geosystems (https://myworld.leica-geosystems.com) offers a wide range of services, information and training material.

With direct access to myWorld, you are able to access all relevant services whenever it is convenient for you, 24 hours a day, 7 days per week. This increases your efficiency and keeps you and your equipment instantly updated with the latest information from Leica Geosystems.

Service	Description
myProducts	Simply add all Leica Geosystems products that you and your company own. View detailed information on your products, buy additional options or Customer Care Packages (CCPs), update your products with the latest software and keep up-to date with the latest documentation.
myService	View the service history of your products in Leica Geosystems Service Centers and detailed information on the services performed on your products. For your products that are currently in Leica Geosystems Service Centers view the current service status and the expected end date of service.
mySupport	Create new support requests for your products that will be answered by your local Leica Geosystems Support Team. View the complete history of your Support and view detailed information on each request in case you want to refer to previous support requests.
myTraining	Enhance your product knowledge with the Leica Geosystems Campus - Information, Knowledge, Training. Study the latest online training material or download training material on your products. Keep up-to-date with the latest News on your products and register for Seminars or Courses in your country.

11: External Devices

External Devices: Overview

This section explains which external devices can be used with the instrument.

Portable browsers

- Leica surveying controllers CS10 and CS15

- Other web enabled devices
  Besides the CS10 and CS15 any other device that comes with a web browser and a USB host or Bluetooth connector can be used to configure the instrument. Follow the procedure as describes above for the CS10 and CS15. If no Internet Explorer but another web browser is available on the portable device use this other web browser instead.

Communication devices

- Working with Radio, Modem and GSM devices: Overview

- **Serial devices connected to a GFU housing**
  - Devices fitting into a GFU housing
  - Connecting a GFU device
  - Insert and remove a SIM card step-by step for an external GFU device
  - LED indicators

- **Slot-in devices**
  - Devices fitting into the instruments Slot in (P3)
  - Insert and remove a slot-in-device step-by-step
  - Insert and remove a SIM card step-by-step
  - LED indicators

Routers, switches and hubs

Within a local network the GR/GM receiver has to be connected to some kind of network device. This may be a router, a switch or a hub providing a bandwidth of 10 or 100 MBit. Use a standard Ethernet cable with RJ45 connector and connect the one end with the RJ45 connector of the instrument. Then connect the other end with a RJ45 connector of the network device. As a result the instrument is physically connected to the local network.
Please refer to section “Getting Started” to find more details on how the instrument can be configured to allow access via TCP/IP protocol and how the web interface can be accessed.

Meteorological sensors

Meteorological sensors are used for measuring air pressure, temperature and relative humidity. The data from the meteo sensor is logged together with the GPS raw observations into the MDB and RINEX files. If RINEX logging is active, an additional meteo RINEX file is created that contains the data from the meteo sensor.

Data is logged into the same file as the GNSS raw observations (MDB) or into a file with the same file name but with the extension m (RINEX). No data is logged, unless raw observation logging is configured and a logging session is started.

- Configure a meteo device step-by-step

Tilt sensors

Tilt devices (such as the Leica NIVEL210) are used for measuring inclinations. The data from the tilt device is logged together with the GNSS raw observations into MDB files. When logging RINEX files, the tilt data is written into a special auxiliary file.

- Configure a tilt device step-by-step

Oscillators

An external oscillator can be used to provide a better quality time signal to the receiver than the receiver's own internal clock. The same external oscillator can also be used with a number of receivers so that each receiver is guaranteed to be tracking satellites using the same time signal. An external oscillator is attached to the receiver via the port OSC.

Select **Internal** to use the receivers internal clock, or if an external oscillator is connected to the oscillator port, select the type of external oscillator and the frequency.

The following oscillator types can be used with an instrument:

- TCXO: A temperature compensated crystal oscillator (TCXO) is used.
- OCXO: An oven controlled crystal oscillator (OCXO) is used.
- Rubidium: A rubidium based external oscillator is used.
- Cesium: A cesium based external oscillator is used.

The external oscillator can work with 5 MHz or 10 MHz.

Click here for the technical specifications of the external oscillator port and the required cable.

Leica surveying controllers CS10/CS15

The CS10 and CS15 controllers can be used to configure a GR/GM receiver. The following step-by-step guide explains how to access the web interface of a GR/GM receiver using a CS10 or CS15.

Access via USB connection

Step	Description
1	Power on the GR/GM receiver.
2	Power on the CS10/CS15.

3	Connect the mini USB connector of the USB cable (article number xxx) with the GR/GM receiver.
4	Connect the standard USB connector of the USB cable with the CS10/CS15.
5	On the CS10/CS15 go to **Start** and open the Internet Explorer.
6	Type in **192.168.254.2** in the URL line of the Internet Explorer.

Access via Bluetooth connection

Step	Description
1	Power on the GR25/50 instrument.
2	Power on the CS10/CS15.
3	On the GR25/50 screen, go to **Configuration / Network Config** and scroll down to Bluetooth.
4	Press the left and right button to enable the Bluetooth device on the GR25/50.
5	On the CS10/CS15 exit the SmartWorx application, if installed, to show the Windows desk-top.
6	Go to **Start / Settings / Network and Dial-up Connections**.
7	Tap the **BTPAN1** icon and hold until the menu comes up. Select Enable.
8	Press the Bluetooth icon in the lower right corner and select **Show**.
9	Press the search icon to start searching for Bluetooth devices.
10	Once the GR25/50 is detected, it is shown with its hostname. Tap the GR25/50 icon and select **Pair**. The default Pin is **0000**.
11	Tap the GR25/50 icon again and select open. You will see a serial port connection and a personal area network. Double click the personal area network. You receive a confirmation message that the **Connection** was successful and the Bluetooth LED on the GR25/50 turns blue.
12	Press **OK** in the Confirmation message and close the Bluetooth Manager,
13	On the CS10/CS15 go to Start and open the Internet Explorer.
14	Type in **192.168.253.2** in the URL line of the Internet Explorer.

Working with Radio, Modem and GSM Devices

Working with Radio, Modem and GSM Devices: Overview

A variety of devices can be used with the GR/GM receivers, including:

- GSM/Radio GFU devices connected via a serial port
- Slot-in devices
- External modems connected via a serial port
- External radios connected via a serial port

Related topics

Serial Devices
Slot-in devices

Serial Devices

Devices fitting into a GFU housing

Digital cellular phones fitting into a GFU housing

Digital cellular phone	GFU housing
Siemens MC75	GFU24
CDMA MultiTech MTMMC-C (US)	GFU19, GFU26
CDMA MultiTech MTMMC-C (CAN)	GFU25

Radios fitting into a GFU housing

Radio	GFU housing
Satelline 3AS, transceive	GFU14

Connecting a GFU device

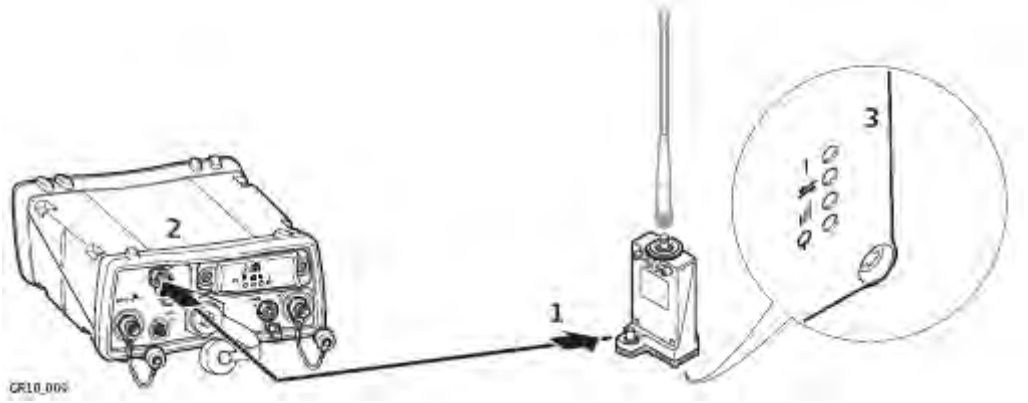

Step	Description
1	Connect the GEV167 GFU cable to the serial port on the GFU housing.
2	Connect the GEV167 GFU cable to the serial port on the instrument.
3	The GFU device is successfully connected to the instrument when the LEDs on the GFU are on, once the data stream or remote connection is configured.

Insert and remove a SIM card step-by step for an external GFU device

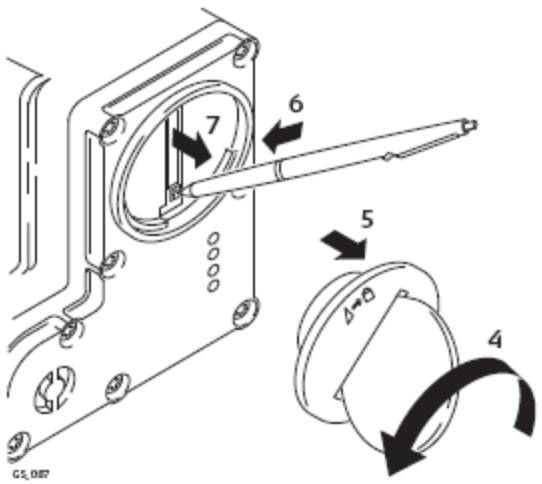

Step	Description
	The SIM card is inserted into a slot on the bottom of the GFU housing.
1	Take the SIM card, a coin and a pen.
2	Locate the SIM card screw, that covers the SIM card slot, on the bottom of the GFU housing.
3	Insert the coin into the groove of the SIM card screw.
4	Turn the coin anticlockwise to loosen the SIM card screw.
5	Remove the SIM card screw from the housing.
6	Using the pen, press the small button of the SIM card slot to eject the SIM card holder.
7	Take the SIM card holder out of the housing.
8	Put the SIM card into the SIM card holder, the chip facing up.
9	Insert the SIM card holder into the SIM card slot, the chip facing the connectors inside the slot.
10	Place the SIM card screw back on the housing.
11	Insert the coin into the groove of the SIM card screw.
12	Turn the coin clockwise to tighten the SIM card screw.

LED indicators

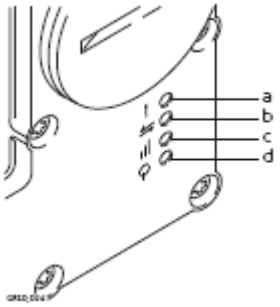

a. Warning LED, available for Satelline SAS
b. Data transfer LED
c. Signal strength LED
d. Power LED

Description of the LED's

IF the	on	is	THEN
Warning LED	GFU14 with Satelline 3AS	red	the device is in the configuration mode controlled from the PC via cable.
Data transfer LED	any device	off	data is not being transferred.
		green or flashing green	data is being transferred.
Signal strength LED	GFU19 (US), GFU25 (CAN), GFU26 (US) with CDMA MultiTech MTMMC-C	red	device is on, not registered on the network.
		flashing red	device is on, registered on the network.
		off	download mode or device is off.
	GFU24 with Siemens MC75 GFU28 with Telit 3G	red	call is in progress.
		red: long flash, long break	no SIM card inserted, no PIN entered or network search, user authentication or network login in progress.
		red: short flash, long break	logged onto network, no call in progress.
		red: flashing red, long break	GPRS PDP context activated.
		red: long flash, short break	Packet switched data transfer is in progress.
		off	device is off.
	GFU29 with Cinterion PXS8	off	LED has not been activated by the GS10/GS15.
		500 ms on and 500 ms off	network searching or limited GSM/UMTS service due to

			missing SIM or PIN.
		Flashing every 4 s	registered to network but no data transfer in progress.
		Flashing every 2s	packet service data transfer in progress.
		Flashing every 1 s	circuit switched data transfer in progress (GSM/UMTS only).
	GFU14 with Satelline 3AS	red or flashing red	the communication link, **D**ata **C**arrier **D**etection, is okay on the roving receiver.
		off	the DCD is not okay.
Power LED	GFU29 with Cinterion PXS8	off	power is completely off OR GSM module is shut down. 10 s power down are required to restart.
		green	power is on AND GSM module is ready.
	any device	off	power is off.
		green	power is okay.

Slot-in Devices

Devices fitting into the slot-in port (P3)

Digital cellular phones fitting into the slot-in port (P3)

Digital cellular phone	Device
Telit 3G GSM/GPRS/UMTS	SLG1-2
CINTERION MC75i GSM/GPRS/UMTS	SLG2-2

Radios fitting into the slot-in port (P3)

Radio	Device
Satelline TA11	SLR1-2

Insert and remove a slot-in-device step-by-step

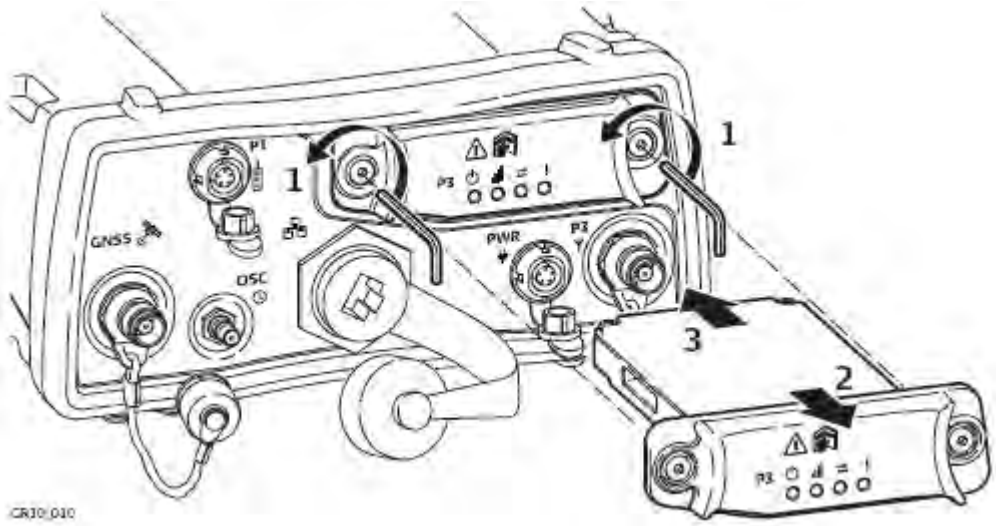

Step	Description
1	Loosen the screws of the Communication Slot-in port (P3) with the Allen key that is supplied with the slot-in device.

2	Remove the compartment cover.
3	Insert the slot-in device into the P3 Slot-in port.
☞	The LED's on the device must face downwards.
4	Reattach the compartment cover and tighten the screws. All screws have to be tightened to ensure that the instrument is waterproof.
5	Attach the antenna for the slot-in device to Communication Slot-in port Antenna (P3) which is located below the Slot-in port next to the Power port (PWR).

Insert and remove a SIM card step-by-step

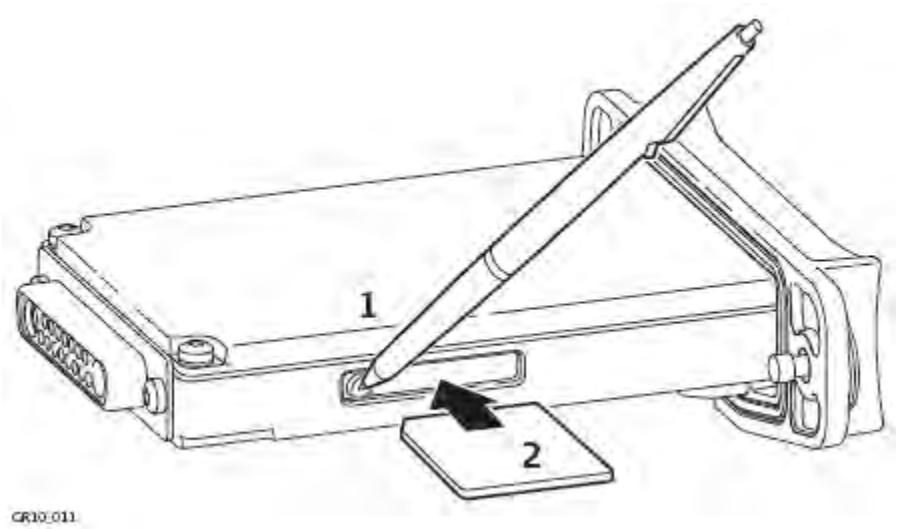

Step	Description
☞	The SIM card is inserted into a slot on the side of the slot-in device.
☞	Take the SIM card and a pen.
1	Using the pen, press the small button of the SIM card slot to eject the SIM card holder.
2	Take the SIM card holder out of the slot-in-device.
3	Place the SIM card into the SIM card holder, the chip facing up.
4	Insert the SIM card holder into the SIM card slot, the chip facing the connectors inside the slot.

LED indicators

Each slot-in-device for a radio or digital cellular phones has Light Emitting Diode indicators on the bottom side. They indicate the basic device status.

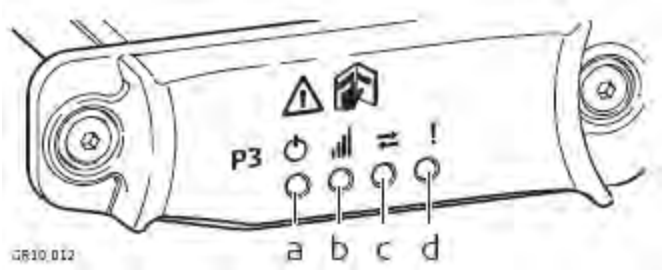

a. Mode LED, available for Satelline TA11
b. Signal strength LED
c. Data transfer LED
d. Power LED

IF the	on	is	THEN
Mode LED	SLR1-2 with Satelline TA11	red	the device is in the programming mode controlled from the PC via cable.

Data transfer LED	any device	off	data is not being transferred.
		flashing green	data is being transferred.
Signal strength LED	SLG1-2 with Telit 3G, SLG2-2 with Cinterion MC75i	red	call is in progress.
		red: long flash, long break	no SIM card inserted, no PIN entered or network search, user authentication or network login in progress.
		red: short flash, long break	logged onto network, no call in progress.
		red: flashing red, long break	GPRS PDP context activated.
		red: long flash, short break	Packet switched data transfer is in progress.
		off	device is off.
	SLR1-2 with Satelline TA11	red	the communication link, **D**ata **C**arrier **D**etection, is okay on the roving instrument.
		flashing red	the communication link, **D**ata **C**arrier **D**etection, is okay on the roving instrument, but signal is weak.
Power LED	any device	off	power is off.
		green	power is okay.

Configure a meteo device step-by-step

Step	Description
1	Use the serial cable which is connected to the meteo device and plug it into the serial port on the instrument.
2	In the web interface go to page **GNSS management / Data streams / Incoming data streams**.
3	Click on button **Create new data stream** to open the wizard.
4	Select **Meteo** as device type and use the **Continue** button.
5	Select the specific meteo device and the data rate you would like to use and use the **Continue** button.
6	Tick the **Activate data stream** check box and use the **Save** button.
☞	Make sure that the settings of the used serial port are identical to the settings of the serial port of the meteo device. For default meteo devices, this is pre-configured correctly for the standard settings of the meteo device.

Configure a tilt device step-by-step

Step	Description
1	Use the serial cable which is connected to the tilt device and plug it into the serial port on the instrument.
2	In the web interface go to page **GNSS management / Data streams / Incoming data streams**.
3	Click on button **Create new data stream** to open the wizard.
4	Select **Tilt** as device type and use the **Continue** button.
5	Select the specific tilt device and the data rate you would like to use and use the **Continue** button.
6	Tick the **Activate data stream** check box and use the **Save** button.
☞	Make sure that the settings of used serial port are identical to the settings of the serial port of the tilt device. For default tilt devices, this is pre-configured correctly for the standard settings of the tilt device.

External Oscillator

Background information

An external oscillator can be used to provide a better quality time signal to the instrument than the internal clock, for example, through the use of a rubidium or caesium oscillator.

The same external oscillator can also be used with a number of receivers so that each instrument is guaranteed to be tracking satellites using the same time signal. An external oscillator is attached to the instrument via the port OSC.

Click here for the technical specifications of the external oscillator port and the required cable.

Configuring an external oscillator

Step	Description
1	Connect the oscillator cable with the external oscillator.
2	Find the external oscillator port (OSC) on the back of the instrument.
3	Connect the other end of the oscillator cable with the external oscillator port (OSC).
4	In the web interface go to **GNSS management / Tracking**.
5	Select the oscillator type and the frequency.
6	If the receiver should fall back to the internal oscillator in case the external time signal is lost, activate the **Oscillator fallback** check box. Then press the **Save** button.
6	After this the external oscillator is used by the instrument instead of the internal oscillator.
☞	**If an external oscillator is selected but not connected, the receiver will not track any satellite signals.**
☞	**If an external oscillator is selected but not connected and the fallback option is activated, the internal clock will be used.**

12: Default settings

Default settings: Overview

There are two ways of regaining the default receiver settings.

1. Format all settings and reset the complete receiver configuration.
2. Reset the receiver settings for certain settings only.

Menu option	Description
Format receiver settings via Web interface step-by-step	Detailed information on the reformatting of the receiver settings using the Web interface.
Format receiver settings via instrument buttons step-by-step	Detailed information on the reformatting of the receiver settings using the instrument buttons.
Restore default values	A description of which buttons to use to restore default values.

Related topics

Receiver setup: Tools

Appendix G: GR/GM default settings

Format receiver settings via Web Interface step-by-step

Background information

The **Receiver setup / Tools** page allows formatting the complete system configuration.

You can select to keep the communication settings or overwrite all settings.

The following communication settings will **not** be reset: if you select to **Keep the communication settings**.

- Spider and remote access ports
- Network connection settings (Ethernet, mobile internet, Bluetooth (GR25 only))
- DynDNS settings
- Web server settings
- Changes in the device configuration if the device is used for mobile internet setup or for Spider or remote access
- The installed language

Format receiver settings step-by-step

Follow these steps format the receiver settings.

Step	Description
1	Select **Receiver setup / Tools / Tools** tab.
2	In **Format receiver settings**, select **Keep communication settings** or **Reset all**.
☞	If **Keep communication settings** is selected, the following communication settings will not be reset • Spider and remote access ports

	• Network connection settings (Ethernet, mobile Internet, Bluetooth (GR25 only), WLAN (GR25 only) • DynDNS settings • Web server settings • Changes in the device configuration if the device is used for mobile Internet setup or for Spider or remote access • The installed language
3	Press **Format receiver settings**.
4	After the system format is completed, the receiver reboots with all settings set back to the default settings.
5	The Web interface will be redirected to the login page.

Related topics

Receiver setup: Tools
Appendix G: Default settings

Format receiver settings via instrument buttons step-by-step

Format receiver settings via instrument buttons step-by-step

Background information

The receiver settings can be deleted without the web interface by using the **Power** and **Function** button on the GR10/30 & GM10/30 or **buttons** and **display** on the GR25/50.

For detailed information on the instrument buttons go to User Interface GR10/30 & GM10/30: Keyboard or User Interface GR25/50: Keyboard.

Format receiver settings on the GR10/30 & GM10/30 step-by-step

Step	Description
	Make sure the receiver is turned on.
1	Activate the dual button functionality. Press and hold both the **Function button** and **Power button** for **2s** until all LEDs are flashing red.
2	After 1s, the **Raw data logging LED** starts flashing green.
3	Press the **Function button** (4 times) until the **Power LED** starts flashing green.
4	Press the **Function button** for **3 s** to set all configured instrument settings back to factory default values.
5	After the system format is completed, the receiver reboots with all settings set back to the default settings.

Format receiver settings on the GR25/50 step-by-step

Step	Description
	Make sure the receiver is turned on.
1	Press any button to turn on the screen when in sleep mode.

2	Navigate to **Configuration / Maintenance**.
3	Highlight **Format System (all)** and press the **ENTER** button.
4	Press the **ENTER** button again in the confirmation message.
5	After the system format is completed, the receiver reboots with all settings set back to the default settings.

Related topics

Keyboard

Appendix G: Default settings

Format receiver settings via Web interface step-by-step

Restore default values

It is also possible to choose to restore the default settings for selected pages only.

Access the page and press the **Restore default values** button.

This will fill all fields in this page with the factory default settings.

Then press to store the default settings and overwrite the user defined configuration in this page.

13. Technical Data

Technical Data: Overview

All information concerning technical data, such as tracking characteristics, accuracy and antenna related technical data, can be found in Leica GR/GM receivers User Manual, as well as in Leica Spider Hardware Technical data.

14. Legal Information

Legal Information

This software contains copyrighted software which is licensed under various open source licenses.

RSA Data Security, Inc. MD5 Message-Digest Algorithm

Writemime

jQuery SVG

Appendix A: Ports & Pin Assignments

Ports & Pin Assignments: GR10/30 & GM10/30

Description

Some applications require knowledge of the pin assignments for the receiver ports.

Ports at the instrument rear panel

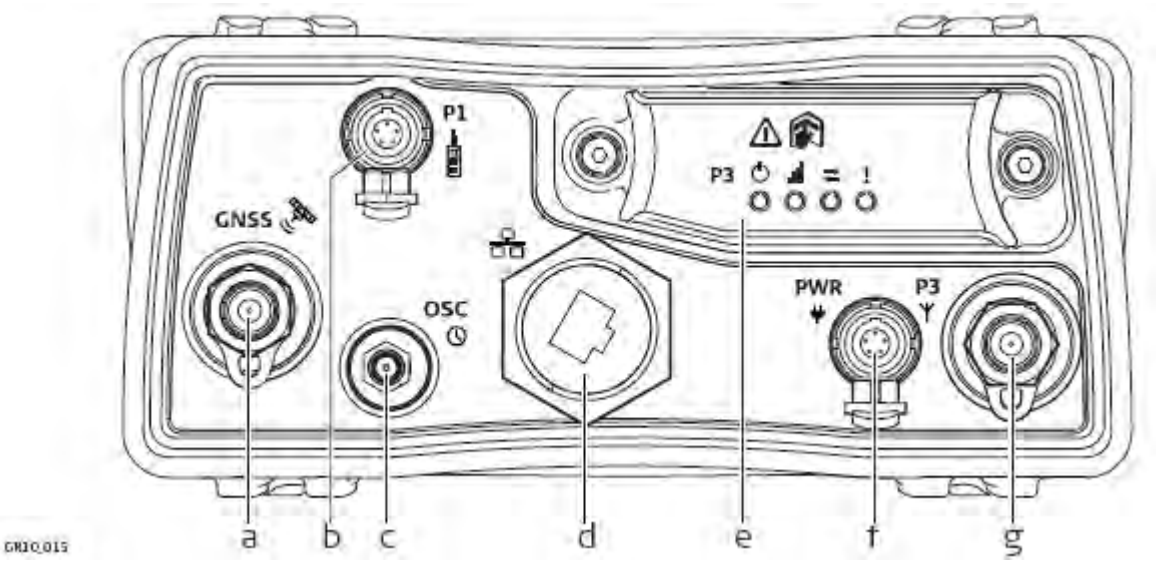

a. **GNSS:** GNSS Antenna port TNC
b. **P1:** Serial port, 8 pin LEMO
c. **OSC:** Oscillator port
d. **Ethernet port:** Ruggedised RJ45
e. **P3:** Communication Slot-in port
f. **PWR:** Power port, 5 pin LEMO, dual input
g. **P3:** Communication Slot-in port Antenna, TNC

Pin assignments for Serial Port P1

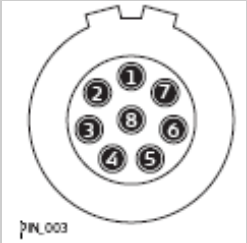

Pin	Signal Name	Function	Direction
1	RTS	RS232, ready to send	Out
2	CTS	RS232, clear to send	In
3	GND	Signal ground	-
4	RxD	RS232, receive data	In
5	TxD	RS232, transmit data	Out
6	ID	Identification pin	In
7	GPIO	RS232, configurable function	In or out
8	+12 V	12 V power supply out	Out

Pin assignments for Power Port, PWR

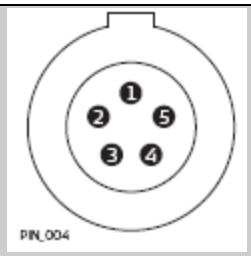

Pin	Signal Name	Function	Direction
1	PWR1	Power input, 11 V-28 V	In
2	ID1	Identification pin	In
3	GND	Signal ground	-
4	PWR2	Power input, 11 V-28 V	In
5	ID2	Identification pin	In

Sockets

Port P1: LEMO-1, 8 pin, LEMO EGI.1B.308.CLN
Port PWR: LEMO-1, 5 pin, LEMO HMG.1B.305.CLNP

Ports & Pin Assignments: GR25/50

Description

Some applications require knowledge of the pin assignments for the receiver ports.

Ports at the instrument rear panel

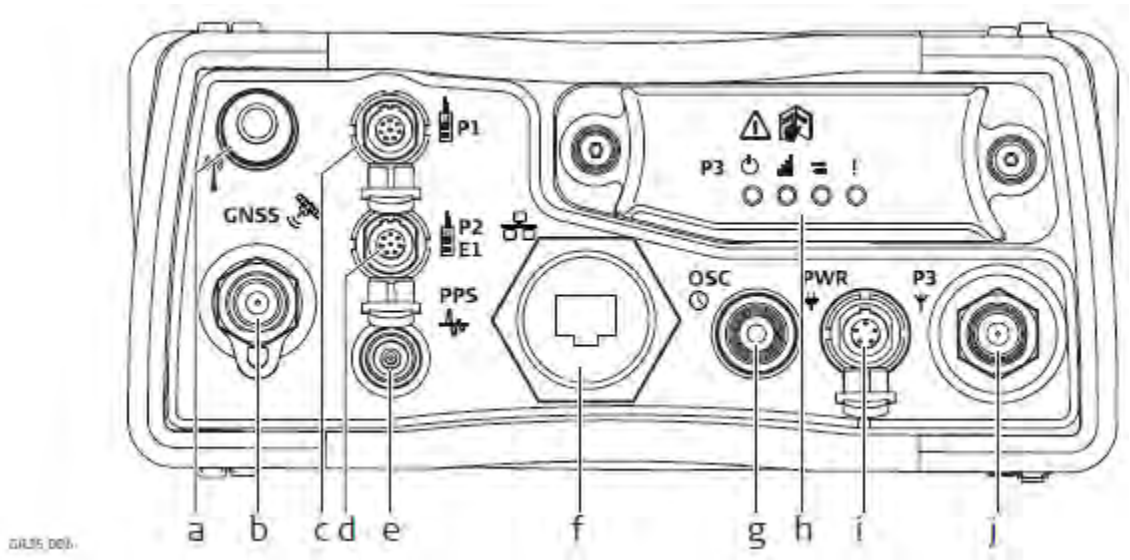

a. **Bluetooth:** BT Antenna OR **WLAN**: WLAN Antenna
b. **GNSS:** GNSS Antenna port TNC
c. **P1:** Serial port, 8 pin LEMO
d. **P2:** Serial/Event port, 8 pin LEMO
e. **PPS:** Pulse per second output
f. Ethernet port: Ruggedised RJ45
g. **OSC:** Oscillator port
h. **P3:** Communication Slot-in port
i. **PWR:** Power port, 5 pin LEMO, dual input
j. **P3:** Communication Slot-in port Antenna, TNC

Pin assignments for P1: Serial Port

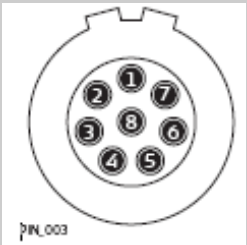

Pin	Signal Name	Function	Direction
1	RTS	RS232, ready to send	Out
2	CTS	RS232, clear to send	In
3	GND	Signal ground	-
4	RxD	RS232, receive data	In
5	TxD	RS232, transmit data	Out
6	ID	Identification pin	In
7	GPIO	RS232, configurable function	In or out
8	+12 V	12 V power supply out	Out

Pin assignments for P2: Serial Port

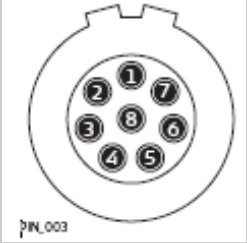

Pin	Signal Name	Function	Direction
1	RTS	RS232, ready to send	Out
2	CTS	RS232, clear to send	In
3	GND	Signal ground	-
4	RxD	RS232, receive data	In
5	TxD	RS232, transmit data	Out
6	ID	Identification pin	In
7	GPIO / EVT IN	RS232, general purpose input/output	In or out
8	+12 V	12 V power supply out	Out

Pin assignments for PWR: Power Port

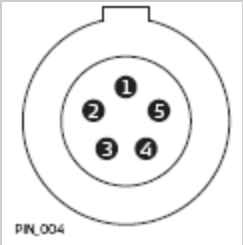

Pin	Signal Name	Function	Direction
1	PWR1	Power input, 10.5 V-28 V	In
2	ID1	Identification pin	In
3	GND	Signal ground	-
4	PWR2	Power input, 10.5 V-28 V	In
5	ID2	Identification pin	In

Sockets

Port P1: LEMO-1, 8 pin, LEMO EGI.1B.308.CLN
Port P2: LEMO-1, 8 pin, LEMO EGI.1B.308.CLN
Port PWR: LEMO-1, 5 pin, LEMO HMG.1B.305.CLNP
PPS: LEMO REN.OS.250.CTL
OSC: MMCX female - 24QMA-50-2-3/133

Appendix B: NMEA Messages

B1: NMEA Messages - Overview

Background information

National **M**arine **E**lectronics **A**ssociation is a standard for interfacing marine electronic devices. This chapter describes all NMEA-0183 messages which can be output by the receiver.

A Talker ID appears at the beginning of the header of each NMEA message. The Talker ID can be user defined or standard (based on the NMEA 4.0). This is usually GP for GPS, GL for GLONASS, GA for Galileo, BD for BeiDou or GN for GPS/GLONASS/Galileo/BeiDou in any combination.

- B2: Used symbols for describing the NMEA formats
- B3: GGA - Global Positioning System Fix Data
- B4: GGK - Real time Position with DOP
- B5: GGK(PT) - Real time Position with DOP, Trimble Proprietary
- B6: GGQ - Real time Position with CQ
- B7: GLL - Geographical Position Latitude/Longitude
- B8: GNS - GNSS Fix Data
- B9: GSA - GNSS DOP and Active Satellites
- B10: GSV - GNSS Satellites in View
- B11: RMC - Recommended Minimum Specific GNSS Data
- B12: VTG - Course Over Ground and Ground Speed
- B13: ZDA - Time and Date
- B14: LVM - Leica Velocity Measurement
- B15: LDM - Leica Displacement Measurement

B2: Used symbols for describing the NMEA formats

Background information

NMEA messages consist of various fields. The fields are:

- Header
- Special format fields
- Numeric value fields
- Information fields
- Null fields

Certain symbols are used as identifier for the field types. These symbols are described in this section.

Header

Symbol	Field	Description	Example
$	-	Start of sentence	$

--ccc	Address	• -- = alphanumeric characters identifying the talker Options: GP = GPS only GL = GLONASS only GN = **G**lobal **N**avigation **S**atellite **S**ystem • ccc = alphanumeric characters identifying the data type and string format of the successive fields. This is usually the name of the message.	GPGGA

Special format fields

Symbol	Field	Description	Example
A	Status	• A = Yes, Data Valid, Warning Flag Clear • V = No, Data Invalid, Warning Flag Set	V
llll.ll	Latitude	• Degreesminutes.decimal • Two fixed digits of degrees, two fixed digits of minutes and a variable number of digits for decimal fraction of minutes. • Leading zeros are always included for degrees and minutes to maintain fixed length.	4724.538950
yyyyy.yy	Longitude	• Degreesminutes.decimal • Three fixed digits of degrees, two fixed digits of minutes and a variable number of digits for decimal fraction of minutes. • Leading zeros are always included for degrees and minutes to maintain fixed length.	00937.046785
eeeeee.eee	Grid Easting	At the most six fixed digits for metres and three fixed digits for decimal fractions of metres.	195233.507
nnnnnn.nnn	Grid Northing	At the most six fixed digits for metres and three fixed digits for decimal fractions of metres.	127223.793
hhmmss.ss	Time	• hoursminutesseconds.decimal • Two fixed digits of hours, two fixed digits of minutes, two fixed digits of seconds and a variable number of digits for decimal fraction of seconds. • Leading zeros are always included for hours, minutes and seconds to maintain fixed length.	115744.00
mmddyy	Date	• Monthdayyear - two fixed digits of month, two fixed digits of day, two fixed digits of year. • Leading zeros always included for month, day and year to maintain fixed length.	093003
No specific symbol	Defined field	• Some fields are specified to contain predefined constants, most often alpha characters.	M

		• Such a field is indicated by the presence of one or more valid characters. Excluded from the list of valid characters are the following that are used to indicate other field types: A, a, c, x, hh, hhmmss.ss, llll.ll, yyyyy.yy.	

Numeric value fields

Symbol	Field	Description	Example
x.x	Variable numbers	• Integer or floating numeric field • Optional leading and trailing zeros. Decimal point and associated decimal-fraction are optional if full resolution is not required.	73.10 = 73.1 = 073.1 = 73
hh_	Fixed HEX field	Fixed length HEX numbers	3F

Information fields

Symbol	Field	Description	Example
c--c	Variable text	Variable length valid character field	A
aa_	Fixed alpha field	Fixed length field of upper case or lower case alpha characters	N
xx_	Fixed number field	Fixed length field of numeric characters	1

Null fields

Symbol	Field	Description	Example
No symbol	Information unavailable for output	Null fields do not contain any information at all.	,,

- Fields are always separated by a comma. Before the Checksum field there is never a comma.
- When information for a field is not available, the position in the data string is empty.

B3: GGA - Global Positioning System Fix Data

Syntax

$--GGA,hhmmss.ss,llll.ll,a,yyyyy.yy,a,x,xx,x.x,x.x,M,x.x,M,x.x,xxxx*hh<CR><LF>

Description of fields

Field	Description
$--GGA	Header including Talker ID
hhmmss.ss	UTC time of position
llll.ll	Latitude (WGS 1984)
a	Hemisphere, North or South
yyyyy.yy	Longitude (WGS 1984)
a	East or West
x	Position quality indicator 0 = Fix not available or invalid 1 = No real time position, navigation fix 2 = Real time position, ambiguities not fixed 3 = Valid fix for GNSS Precise Positioning Service mode, for example WAAS 4 = Real time position, ambiguities fixed
xx	Number of satellites in use, 00 to 26.
x.x	HDOP
x.x	Altitude of position marker above/below mean sea level in metres. If no orthometric height is available the local ellipsoidal height will be exported. If the local ellipsoidal height is not available either, the WGS 1984 ellipsoidal height will be exported.
M	Units of altitude as fixed text M
x.x	Geoidal separation in metres. This is the difference between the WGS 1984 earth ellipsoid surface and mean sea level.
M	Units of geoidal separation as fixed text M
x.x	Age of differential GNSS data, empty when DGPS not used
xxxx	Differential reference station ID, 0000 to 1023
*hh	Checksum
<CR>	Carriage Return
<LF>	Line Feed

Examples

User defined Talker ID = GN

$GNGGA,113805.50,4724.5248541,N,00937.1063044,E,4,13,0.7,1171.281,M,-703.398,M,0.26,0000*42

B4: GGK - Real time Position with DOP

Syntax

$--GGK,hhmmss.ss,mmddyy,llll.ll,a,yyyyy.yy,a,x,xx,x.x,EHTx.x,M*hh<CR><LF>

Description of fields

Field	Description
$--GGK	Header including Talker ID
hhmmss.ss	UTC time of position
mmddyy	UTC date
llll.ll	Latitude (WGS 1984)
a	Hemisphere, **N**orth or **S**outh
yyyyy.yy	Longitude (WGS 1984)

a	**E**ast or **W**est
x	Position quality indicator 0 = Fix not available or invalid 1 = No real time position, navigation fix 2 = Real time position, ambiguities not fixed 3 = Real time position, ambiguities fixed
xx	Number of satellites in use, 00 to 26.
x.x	GDOP
EHT	Ellipsoidal height
x.x	Altitude of position marker as local ellipsoidal height. If the local ellipsoidal height is not available, the WGS 1984 ellipsoidal height will be exported.
M	Units of altitude as fixed text M
*hh	Checksum
<CR>	Carriage Return
<LF>	Line Feed

Examples

Standard Talker ID

$GNGGK,113616.00,041006,4724.5248557,N,00937.1063064,E,3,12,1.7,EHT1171.742,M *6D

User defined Talker ID = GN

$GNGGK,113806.00,041006,4724.5248557,N,00937.1063064,E,3,13,1.4,EHT1171.746,M*66

B5: GGK-PT - Real time Position with DOP, Trimble Proprietary

Syntax

$PTNL,GGK,hhmmss.ss,mmddyy,llll.ll,a,yyyyy.yy,a,x,xx,x.x,EHTx.x,M*hh<CR><LF>

Description of fields

Field	Description
$PTNL	$ = Start of sentence delimiter, talker ID fixed with PTNL
GGK	GGK sentence formatter
hhmmss.ss	UTC time of position
mmddyy	UTC date
llll.ll	Latitude (WGS 1984)
a	Hemisphere, **N**orth or **S**outh
yyyyy.yy	Longitude (WGS 1984)
a	**E**ast or **W**est
x	Position quality indicator 0 = Fix not available or invalid 1 = No real time position, navigation fix 2 = Not existing 3 = Real time position, ambiguities fixed 4 = Real time position, ambiguities not fixed

xx	Number of satellites in use, 00 to 26.
x.x	PDOP
EHT	Ellipsoidal height
x.x	Altitude of position marker as local ellipsoidal height. If the local ellipsoidal height is not available, the WGS 1984 ellipsoidal height will be exported.
M	Units of altitude as fixed text M
*hh	Checksum
<CR>	**C**arriage **R**eturn
<LF>	**L**ine **F**eed

Examples

Standard Talker ID

$PTNL,GGK,113616.00,041006,4724.5248557,N,00937.1063064,E,3,12,1.5,EHT1171.742,M*4C

User defined Talker ID = GN

$PTNL,GGK,113806.00,041006,4724.5248557,N,00937.1063064,E,3,13,1.2,EHT1171.746,M*43

B6: GGQ - Real time Position with CQ

Syntax

$--GGQ,hhmmss.ss,mmddyy,llll.ll,a,yyyyy.yy,a,x,xx,x.x,x.x,M*hh<CR><LF>

Description of fields

Field	Description
$--GGQ	Header including talker ID
hhmmss.ss	UTC time of position
mmddyy	UTC date
llll.ll	Latitude (WGS 1984)
a	Hemisphere, **N**orth or **S**outh
yyyyy.yy	Longitude (WGS 1984)
a	**E**ast or **W**est
x	Position quality indicator 0 = Fix not available or invalid 1 = No real time position, navigation fix 2 = Real time position, ambiguities not fixed 3 = Real time position, ambiguities fixed
xx	Number of satellites in use, 00 to 26.
x.x	Coordinate quality in metres
x.x	Altitude of position marker above/below mean sea level in metres. If no orthometric height is available the local ellipsoidal height will be exported. If the local ellipsoidal height is not available either, the WGS 1984 ellipsoidal height will be exported.
M	Units of altitude as fixed text M
*hh	Checksum
<CR>	**C**arriage **R**eturn

<LF>	**L**ine **F**eed

Examples

Standard Talker ID

$GNGGQ,113615.50,041006,4724.5248556,N,00937.1063059,E,3,12,0.009,1171.281,M*22

$GPGGQ,113615.50,041006,,,,08,,*67

$GLGGQ,113615.50,041006,,,,04,,*77

User defined Talker ID = GN

$GNGGQ,113805.50,041006,4724.5248541,N,00937.1063044,E,3,13,0.010,1171.281,M*2E

B7: GLL - Geographical Position Latitude/Longitude

Syntax

$--GLL,llll.ll,a,yyyyy.yy,a,hhmmss.ss,A,a*hh<CR><LF>

Description of fields

Field	Description
$--GGL	Header including talker ID
llll.ll	Latitude (WGS 1984)
a	Hemisphere, **N**orth or **S**outh
yyyyy.yy	Longitude (WGS 1984)
a	**E**ast or **W**est
hhmmss.ss	UTC time of position
A	Status A = Data valid V = Data not valid
a	Mode indicator A = Autonomous mode D = Differential mode N = Data not valid
*hh	Checksum
<CR>	**C**arriage **R**eturn
<LF>	**L**ine **F**eed

The Mode indicator field supplements the Status field. The Status field is set to A for the Mode indicators A and D. The Status field is set to V for the Mode indicator N.

Examples

Standard Talker ID

$GNGLL,4724.5248556,N,00937.1063059,E,113615.50,A,D*7B

User defined Talker ID = GN

$GNGLL,4724.5248541,N,00937.1063044,E,113805.50,A,D*7E

B8: GNS - GNSS Fix Data

Syntax

$--GNS,hhmmss.ss,llll.ll,a,yyyyy.yy,a,c--c,xx,x.x,x.x,x.x,x.x,xxxx*hh<CR><LF>

Description of fields

Field	Description
$--GNS	Header including talker ID
hhmmss.ss	UTC time of position
llll.ll	Latitude (WGS 1984)
a	Hemisphere, **N**orth or **S**outh
yyyyy.yy	Longitude (WGS 1984)
a	**E**ast or **W**est
c--c	Mode indicator N = Satellite system not used in position fix or fix not valid A = Autonomous; navigation fix, no real time fix D = Differential; real time position, ambiguities not fixed R = Real time kinematic; ambiguities fixed
xx	Number of satellites in use, 00 to 99.
x.x	HDOP
x.x	Altitude of position marker above/below mean sea level in metres. If no orthometric height is available the local ellipsoidal height will be exported. If the local ellipsoidal height is not available either, the WGS 1984 ellipsoidal height will be exported.
x.x	Geoidal separation in metres
x.x	Age of differential data
xxxx	Differential reference station ID, 0000 to 1023
M	Units of altitude as fixed text M
*hh	Checksum
<CR>	**C**arriage **R**eturn
<LF>	**L**ine **F**eed

Examples

Standard Talker ID

$GNGNS,113616.00,4724.5248557,N,00937.1063064,E,RR,12,0.9,1171.279,-703.398,0.76,0000*6C

$GPGNS,113616.00,,,,,,08,,,,,*69

$GLGNS,113616.00,,,,,,04,,,,,*79

User defined Talker ID = GN

$GNGNS,113806.00,4724.5248547,N,00937.1063032,E,R,13,0.7,1171.283,-703.398,0.76,0000*39

B9: GSA - GNSS DOP and Active Satellites

Syntax

$--GSA,a,x,xx,xx,xx,xx,xx,xx,xx,xx,xx,xx,xx,xx,x.x,x.x,x.x*hh<CR><LF>

Description of fields

Field	Description
$--GSA	Header including talker ID
a	Mode M = Manual, forced to operate in 2D or 3D mode A = Automatic, allowed to automatically change between 2D and 3D
x	Mode 1 = Fix not available 2 = 2D 3 = 3D
xx	Numbers of the satellites used in the solution. This field is repeated 12 times. 1 to 32 = PRN numbers of GPS satellites 33 to 64 = Numbers of WAAS and WAAS like satellites 65 to 96 = Slot numbers of GLONASS satellites
x.x	PDOP
x.x	HDOP
x.x	VDOP
*hh	Checksum
<CR>	**C**arriage **R**eturn
<LF>	**L**ine **F**eed

GSA NMEA version 4.0 does not support BeiDou and Galileo.

Examples

Standard Talker ID

$GNGSA,A,3,01,11,14,17,19,20,24,28,,,,,1.5,0.9,1.2*26

$GNGSA,A,3,65,66,67,81,,,,,,,,,1.5,0.9,1.2*29

User defined Talker ID = GN

$GNGSA,A,3,01,11,14,17,19,20,23,24,28,,,,65,66,67,81,,,,,,,,,1.2,0.7,1.0*27

B10: GSV - GNSS Satellites in View

Syntax

$--GSV,x,x,xx,xx,xx,xxx,xx,.....*hh<CR><LF>

Description of fields

Field	Description
$--GSV	Header including talker ID
x	Total number of messages, 1 to 4

x	Message number, 1 to 4
xx	Number of theoretically visible satellites according to the current almanac.
xx	PRN (GPS) / Slot (GLONASS) number of satellite
xx	Elevation in degrees, 90 maximum, empty when not tracking
xxx	Azimuth in degrees true North, 000 to 359, empty when not tracking
xx	**S**ignal to **N**oise **R**ation C/No in dB, 00 to 99 of L1 signal, null field when not tracking.
...	Repeat set PRN / Slot number, elevation, azimuth and SNR up to four times
*hh	Checksum
<CR>	**C**arriage **R**eturn
<LF>	**L**ine **F**eed

Satellite information may require the transmission of multiple messages, specified by the total number of messages and the message number.

The fields for the PRN / Slot number, Elevation, Azimuth and SNR form one set. A variable number of these sets are allowed up to a maximum of four sets per message.

Examples

Standard Talker ID

$GPGSV,3,1,11,01,55,102,51,11,85,270,50,14,31,049,47,17,21,316,46*7A
$GPGSV,3,2,11,19,31,172,48,20,51,249,50,22,00,061,,23,11,190,42*7E
$GPGSV,3,3,11,24,11,292,43,25,08,114,,28,14,275,44,,,,*45
$GLGSV,2,1,06,65,16,055,42,66,64,025,48,67,46,262,42,68,01,245,*64
$GLGSV,2,2,06,81,52,197,47,83,07,335,,,,,,,,,*68

User defined Talker ID = GN

$GNGSV,3,1,10,01,55,100,51,11,86,263,50,14,31,049,47,17,22,316,46*65
$GNGSV,3,2,10,19,30,172,48,20,52,249,51,23,12,190,42,24,12,292,42*6C
$GNGSV,3,3,10,25,09,114,,28,14,274,44,,,,,,,*62

B11: RMC - Recommended Minimum Specific GNSS Data

Syntax

$--RMC,hhmmss.ss,A,llll.ll,a,yyyyy.yy,a,x.x,x.x,xxxxxx,x.x,a,a*hh<CR><LF>

Description of fields

Field	Description
$--RCM	Header including talker ID
hhmmss.ss	UTC time of position
A	Status A = Data valid V = Navigation receiver warning
llll.ll	Latitude (WGS 1984)
a	Hemisphere, **N**orth or **S**outh
yyyyy.yy	Longitude (WGS 1984)
a	**E**ast or **W**est

x.x	Speed over ground in knots
x.x	Course over ground in degrees
xxxxxx	Date: ddmmyy
x.x	Magnetic variation in degrees
a	**E**ast or **W**est
a*hh	Mode Indicator A = Autonomous mode D = Differential mode N = Data not vaild
<CR>	**C**arriage **R**eturn
<LF>	**L**ine **F**eed

Examples

Standard Talker ID

$GNRMC,113616.00,A,4724.5248557,N,00937.1063064,E,0.01,11.43,100406,11.43,E,D*1C

User defined Talker ID = GN

$GNRMC,113806.00,A,4724.5248547,N,00937.1063032,E,0.00,287.73,100406,287.73,E,D*10

B12: VTG - Course Over Ground and Ground Speed

Syntax

$--VTG,x.x,T,x.x,M,x.x,N,x.x,K,a*hh<CR><LF>

Description of fields

Field	Description
$--VTG	Header including talker ID
x.x	Course over ground in degrees true North, 0.0 to 359.9
T	Fixed text T for true North
x.x	Course over ground in degrees magnetic North, 0.0 to 359.9
M	Fixed text M for magnetic North
x.x	Speed over ground in knots
N	Fixed text N for knots
x.x	Speed over ground in km/h
K	Fixed text K for km/h
a	Mode Indicator A = Autonomous mode D = Differential mode N = Data not valid
*hh	Checksum
<CR>	**C**arriage **R**eturn
<LF>	**L**ine **F**eed

Examples

Standard Talker ID

$GNVTG,11.4285,T,11.4285,M,0.007,N,0.013,K,D*3D

User defined Talker ID = GN

$GNVTG,287.7273,T,287.7273,M,0.002,N,0.004,K,D*3E

B13: ZDA - Time and Date

Syntax

$--ZDA,hhmmss.ss,xx,xx,xxxx,xx,xx*hh<CR><LF>

Description of fields

Field	Description
$--ZDA	Header including talker ID
hhmmss.ss	UTC time
xx	UTC day, 01 to 31
xx	UTC month, 01 to 12
xxxx	UTC year
xx	Local zone description in hours, 00 to ±13
xx	Local zone description in minutes, 00 to +59
*hh	Checksum
<CR>	**C**arriage **R**eturn
<LF>	**L**ine **F**eed

This message is given high priority and is output as soon as it is created. Latency is therefore reduced to a minimum.

Examples

Standard Talker ID

$GPZDA,091039.00,01,10,2003,-02,00*4B

User defined Talker ID = GN

$GNZDA,113806.00,10,04,2006,02,00*76

B14: LVM - Leica Velocity Measurement

Syntax

$--LVM, hhmmss.ss, mmddyy, E.EEEE, N.NNNN, U.UUUU, v.v, v.v, v.v, c.c , c.c , c.c, q.q, xx*hh<CR><LF>

Description of fields

Field	Description
$--LVM	Header including talker ID: • -- = alphanumeric characters identifying the talker

	Options: GP = GPS only GL = GLONASS only GA = Galileo only BD = BeiDou only GN = **G**lobal **N**avigation **S**atellite **S**ystem • LVM = name of the message
hhmmss.ss	UTC time of velocity (Check official NMEA section 6.2.1)
mmddyy	UTC date of velocity
E.EEEE	East component of the receiver's velocity, [m/s]
N.NNNN	North component of the receiver's velocity, [m/s]
U.UUUU	Up component of the receiver's velocity, [m/s]
v.v	Variance of the East velocity component, [m2/s2]
v.v	Variance of the North velocity component, [m2/s2]
v.v	Variance of the Up velocity component, [m2/s2]
c.c	Covariance between the East and North velocity components, [m2/s2]
c.c	Covariance between the East and Up velocity components, [m2/s2]
c.c	Covariance between the Up and North velocity components, [m2/s2]
q.q	3D velocity Component Quality (CQ[1]), [m/s]
xx	Number of satellites whose observations have been used to calculate the velocity values
*hh	Checksum
<CR>	**C**arriage **R**eturn
<LF>	**L**ine **F**eed

[1] CQ stands for Component Quality and is given by the sum of the standard deviation and of the contribution of empirical assumptions. Therefore, CQ accounts for measurements noise, environmental conditions (e.g. tropospheric and ionospheric delay) and for the influence of the different constellations on the components.

Example

User defined Talker ID = GN

$GNLVM,113805.50,030215,0.0011,0.0021,0.0015,0.0023,0.0040,0.0092, 0.00012,0.00015,0.00035,0.043561,19*47

B15: LDM - Leica Displacement Measurement

Syntax

$--LDM,hhmmss.ss, mmddyy, hhmmss.ss , mmddyy, E.EEEE, N.NNNN, U.UUUU, v.v, v.v, v.v, c.c , c.c , c.c, q.q, xx, a, a, a *hh<CR><LF>

Description of fields

Field	Description
$--LDM	Header including talker ID: • -- = alphanumeric characters identifying the talker

	Options: GP = GPS only GL = GLONASS only GA = Galileo only BD = BeiDou only GN = **G**lobal **N**avigation **S**atellite **S**ystem • LDM = name of the message
hhmmss.ss	UTC time of displacement (Check official NMEA section 6.2.1)
mmddyy	UTC date of displacement
hhmmss.ss	UTC time of start of displacement computation. This time refers to the time when the displacement is reset to 0, i.e. after enabling the stream, or changing the receiver reference position.
mmddyy	UTC date of start of displacement computation.
E.EEEE	East component of the receiver's displacement, [m]
N.NNNN	North component of the receiver's displacement, [m]
U.UUUU	Up component of the receiver's displacement, [m]
v.v	Variance of the East displacement component, [m2]
v.v	Variance of the North displacement component, [m2]
v.v	Variance of the Up displacement component, [m2]
c.c	Covariance between the East and North displacement components, [m2]
c.c	Covariance between the East and Up displacement components, [m2]
c.c	Covariance between the Up and North displacement components, [m2]
q.q	3D displacement Component Quality (CQ[1]), [m]
xx	Number of satellites whose observations have been used to calculate the velocity used to compute the displacement value
a	Last displacement reset indicator: 0 = Last reset happened after enabling the NMEA stream 1 = Last reset happened after changing receiver reference position
a.a[2]	Epoch to epoch data completeness ratio. It indicates the ratio of available observations for displacement computation divided by the number of complete observations between the last and current epoch. Range from 0 to 1: 0: No observations are available 0.x: Parts of observations are available 1: All observations are available
a.a[3]	Overall data completeness ratio. It indicates the ratio of available observations for displacement computation divided by the number of complete observations between the start of displacement computation and the current epoch. Range from 0 to 1: 0: No observations are available 0.x: Parts of observations are available 1: All observations are available
*hh	Checksum
<CR>	**C**arriage **R**eturn
<LF>	**L**ine **F**eed

[1] CQ stands for Component Quality and is given by the sum of the standard deviation and of the contribution of empirical assumptions. Therefore, CQ accounts for measurements noise, environmental conditions (e.g. tropospheric and ionospheric delay) and for the influence of the different constellations on the components.

[2] If the user configures a NMEA LDM stream with a rate equal to the receiver positioning rate, then for each epoch one observation is used for displacement calculation. In this case, the epoch to epoch data completeness ratio will be equal to 1, i.e. observation is

available and used for displacement computation, or 0, i.e. no observation is available and no displacement is computed at this epoch. If the user configures a 1 Hz epoch rate NMEA LDM stream and the receiver positioning rate is 20 Hz, then for each epoch 20 observations are used for displacement calculation. In this case, the epoch to epoch data completeness ratio can be equal to 1, i.e. all 20 observations are available and used for displacement computation, or 0, i.e. no observations are available and no displacement is computed at this epoch, or any value between 0 and 1, e.g. 0.2, i.e. 4 observations out of 20 possible are used for displacement computation.

[3] Overall data completeness ratio is reset after changing the reference position or enabling/disabling the Velocity & Displacement Engine.

Example

User defined Talker ID = GN

$GNLDM,113805.50,030215,113805.50,030215,0.0101,0.0204,0.0459,0.0021,0.0020,0.0041,0.00021,0.00023,0.00041,0.05,19,0,1,1*47

Appendix C: RTCM Messages

RTCM Message Types

Background information

Radio Technical Commission for Maritime services. Commission set up to define a differential data link to relay GPS correction messages from a monitor station to a field user.

RTCM 2.x

Type	Description
1	Differential GPS Corrections. Message Type 1 provides the pseudorange correction (PRC(t)) for any user receiver GPS measurement time "t". The Type 1 Message contains data for all satellites in view of the reference station.
2	Delta Differential GPS Corrections. Upon a change in ephemeris, the reference station broadcasts a Type 2 message paired with a Type 1 message, and continues to broadcast Type 2 messages over a period of several minutes following a change in satellite navigation data in order to accommodate users coming on line. The message contains the difference in the pseudorange and range rate corrections caused by the change in satellite navigation data. The general format is the same as that of a Type 1 Message.
3	GPS Reference Station Parameters. Message Type 3 contains reference station information. It includes the GPS coordinates (Earth-Centered-Earth-Fixed (ECEF)) of the reference station antenna to the nearest centimetre. WGS-84 is the recommended reference datum. If a datum other than WGS-84 is used, Message Type 4 will be broadcast frequently to inform the users of the datum being used for the reference station coordinates.
9	GPS Partial Correction Set. The Type 9 Message serves the same purpose as the Type 1 Message, in that it contains the primary differential GPS corrections. However, unlike Type 1's, Type 9 Messages do not require a complete satellite set.
18	RTK Uncorrected Carrier Phases. GPS/GLONASS Satellite constellation indicator are used to differentiate between the satellite systems. Hence, there are individual messages for GPS and GLONASS satellites and for each frequency. The GNSS time of measurement is referenced to GPS time for GPS satellites and to GLONASS time for GLONASS satellites. Note that GLONASS satellites are supported in v2.3 only.
19	RTK Uncorrected Pseudoranges. GPS/GLONASS Satellite constellation indicator are used to differentiate between the satellite systems. Hence, there are individual messages for GPS and GLONASS satellites and for each frequency. The time of measurement is referenced to GPS time for GPS satellites and to GLONASS time for GLONASS satellites. Note that GLONASS satellites are supported in v2.3 only.
20	RTK Carrier Phase Corrections. Same handling as for Type 18. Note that GLONASS satellites are currently not supported.
21	RTK/High Accuracy Pseudorange Corrections. Same handling as for Type 19. Note that GLONASS satellites are currently not supported.
23 (v2.3 only)	Antenna Type Definition Record. Message Type 23 provides the information on the antenna type used on the reference station. The RTCM commission adopted the naming convention from the IGS equipment-naming table as supplied by the International GNSS Service Central Bureau (IGS CB).This table provides a unique antenna descriptor for antennas used for high-precision surveying type applications.
24 (v2.3 only)	Antenna Reference Point (ARP). Message Type 24 solves the problem of referencing the L1 phase centre by utilizing the Antenna Reference Point (ARP), which is used throughout the International GNSS Service (IGS).

RTCM 3.x

Type	Description
1001	L1-Only GPS RTK Observables.
1002	Extended L1-Only GPS RTK Observables.
1003	Compact L1&L2 GPS RTK Observables.
1004	Extended L1&L2 GPS RTK Observables. Contains Signal to Noise Ratio (SNR).
1005	Stationary RTK Reference Station Antenna Reference Point (ARP).
1006	Stationary RTK reference station ARP coordinates with Antenna Height.
1007	Antenna Descriptor.
1008	Antenna Descriptor & Serial Number.

1011	GLONASS Basic RTK, L1&L2. The Type 1011 Message supports dual-frequency RTK operation, and does not include an indication of the satellite carrier-to-noise (CNR) as measured by the reference station.
1012	GLONASS Extended RTK, L1&L2. The Type 1012 Message supports dual-frequency RTK operation, and includes an indication of the satellite carrier-to-noise (CNR) as measured by the reference station.
1013	System Parameters.
1019	GPS ephemeris data.
1020	GLONASS ephemeris data.
1033	Receiver and Antenna descriptors including serial number and firmware version information.
1230	GLO code-phase biases
4029	Leica Proprietary Message

RTCM 3.x MSM

Type	Description
1073	GPS observations (compact).
1075	GPS observations (extended).
1083	Glonass observations (compact).
1085	Glonass observations (extended).
1093	Galileo observations (compact).
1095	Galileo observations (extended).
1123	BeiDou observations (compact).
1125	BeiDou observations (extended).

Appendix D: RINEX

RINEX MET Observation Types

If RINEX logging is configured, the meteorological data will be logged in a Meteorlogical Data File with the file extension .YYm. The table below describes the RINEX observation types.

RINEX observation type	Description
RINEX	Header abbreviation
PR	Pressure (mbar)
TD	Dry temperature
HR	Relative humidity (%)
WD	Wind azimuth (deg) from where the wind blows
WS	Wind speed (m/s)
RI	Rain increment (1/10 mm): Rain accumulation since last measurement
HI	Hail indicator non-zero: Hail detected since last measurement

RINEX Auxiliary File Definition

Background Information

The Auxiliary files are used to store data recorded by tilt sensors connected to a GNSS reference station. The auxiliary file is not officially part of the RINEX standard.

This definition follows the RINEX v2 standards data notation. An asterisk "*" to the side of the line indicates an optional record or field. Optional fields should be output as spaces if no data or value can be output.

RINEX Header

HEADER LABEL	FIELD	DESCRIPTION	FORMAT
RINEX VERSION / TYPE	RINEX Version	The RINEX file version	F9.2, 11X
	Type	AUXILIARY DATA	A1, 39X
PGM / RUN BY / DATE	PGM	Name of program creating current file	A20
	RUN BY	Name of agency creating current file	A20
	DATE	Date of file creation. The date format is written according to the date format of the corresponding RINEX observation file version.	A20
MARKER NAME		Station Name (preferably identical to MARKER NAME in the associated observation file).	A60
MARKER NUMBER		Station Number (preferably identical to MARKER NUMBER in the associated observation file).	A20, 40X
# / TYPES OF OBSERV	#	Number of different observation types stored in the file.	I6
	TYPES OF OBSERV	TN: TILT in Y axis, usually aligned to North	A6
		TE: TILT in X axis, usually aligned to East	A6
		TT: Temperature of the tilt device (*)	A6
SENSOR MODE / TYPE / ACC Record is repeated for each observation type found in # / TYPES OF OBSERV record.	SENSOR MODE	The sensor model Manufacturer.	A20
	TYPE	The sensor type.	A20
	ACC(*)	The accuracy of the measurement (same units as obs values).	A16, 1X3
	OBS	Denotes the measurement type relating to the aforementioned "SENSOR MOD/TYPE/ACC". Same as used above in "TYPES OF OBSERV (TN/TE/TT)". Record is repeated for each observation type found in # / TYPES OF OBSERV record.	A2, 1X
SENSOR POS XYZ/H	SENSOR POS XYZ	The approximate X, Y, Z position of the sensor – Geocentric coordinates (ITRF).	3(F14.4)

Record is repeated for each observation type found in #/TYPES OF OBSERV record. If only one is given it applies to all sensors.	H	The ellipsoidal height of the sensor.	F14.4
	OBS	Denotes the measurement type that relates to the aforementioned “SENSOR MOD/TYPE/ACC”. Same as used above in “TYPES OF OBSERV (TN/TE/TT)”. If empty, the value is valid for all types of observations.	1X, A2, 1X
COMMENT (*)		Additional non-standardised information. Usually the units are listed for the benefit of users.	A60
END OF HEADER		Marker for the end of the header. Last record in the header section.	60X

Version 2.11

The table below describes the content of the RINEX auxiliary file version 2.11:

RECORD	DESCRIPTION	FORMAT	UNIT
EPOCH	- year (2 digits, padded with 0 if necessary)	1X, I2.2	
	- month, day, hour, min.	4(1X, I2)	
	- sec	1X, F5.2	
OBSERVATION	- TN	F7.3	degrees
	- TE	F7.3	degrees
	- TT(*)	F7.3	degrees Celsius

Version 2.20 & 3.01

The table below describes the content of the RINEX auxiliary file versions 2.20 & 3.01:

RECORD	DESCRIPTION	FORMAT	UNIT
EPOCH	- year (2 digits, padded with 0 if necessary)	1X, I2.2	
	- month, day, hour, min.	4(1X, I2)	
	- sec	1X, F5.2	
OBSERVATION	- TN	F11.6	mrad or degrees
	- TE	F11.6	mrad or degrees
	- TT(*)	F7.3	degrees Celsius

Version 3.02

The table below describes the content of the RINEX auxiliary file version 3.02:

RECORD	DESCRIPTION	FORMAT	UNIT
EPOCH	- year (4 digits, padded with 0 if necessary)	1X, I4.4	
	- month, day, hour, min.	5(1X, I2)	
	- sec	1X, F5.2	
OBSERVATION	- TN	F12.6	mrad
	- TE	F12.6	mrad
	- TT(*)	F12.6	degrees Celsius

Notes:

- Observations can be output in the order as defined in the header definition “# / TYPES OF OBSERV”.
- TN / TE observations shall be set to ±9999.999999, if the measurement value is out of the measuring range of the tilt device.

File naming (applies to all auxiliary file versions)

Product file names are generated from the file creation date, time and type of product.

RINEX	PRODUCTS OF LENGTH OF 1 HOUR PLUS BY DEFAULT WILL BE NAMED: ssssdddh.yyo
ssss	4-character ID for the receiver/antenna
ddd	day of year
hh	character for the starting hour in the day
yy	two-digit year
o	type of file: a - auxiliary

RINEX	PRODUCTS WHOSE LENGTH IS LESS THAN 1 HOUR, E.G. 10 MINUTES, WILL BE NAMED: ssssdddhmm.yyo
ssss	4-character ID for the receiver/antenna
ddd	day of year
hh	character for the starting hour in the day
yy	two-digit year
o	type of file: a - auxiliary

Overview of RINEX Auxiliary file version in RefWorx

Auxiliary File Version	Version of RINEX logging session	RefWx version
2.11	RINEX2	never
2.20	RINEX2	≥ 1.0
3.01	RINEX3	3.0x
3.02	RINEX3	≥ 3.1

Appendix E: Web interface: Directory Structure of the Menu Bar

Appendix: E

Web interface: Directory Structure of the Menu Bar

```
Menu Bar
¦--- Home
¦
¦
¦--- Status
¦        ¦
¦        ¦
¦        ¦---------- Receiver Information
¦        ¦                ¦--- Receiver
¦        ¦                ¦--- Options
¦        ¦
¦        ¦---------- Position
¦        ¦
¦        ¦---------- Tracking
¦        ¦                ¦--- General
¦        ¦                ¦--- GPS
¦        ¦                ¦--- GLONASS
¦        ¦                ¦--- Galileo
¦        ¦                ¦--- BeiDou
¦        ¦                ¦--- QZSS
¦        ¦                ¦--- SBAS
¦        ¦
¦        ¦---------- Data streams
¦        ¦                ¦--- Outgoing data streams
¦        ¦                ¦--- Incoming data streams
¦        ¦
¦        ¦---------- Logging sessions
¦        ¦
¦        ¦---------- Port summary
¦        ¦
¦        ¦---------- Event log
¦        ¦
¦        ¦---------- Network connections
¦        ¦                ¦--- General
¦        ¦                ¦--- Ethernet
¦        ¦                ¦--- Mobile internet
¦        ¦                ¦--- Bluetooth (GR25/50 with Bluetooth radio only)
¦        ¦                ¦--- WLAN (GR25/50 with WLAN radio only)
¦        ¦
¦        ¦---------- System resources
```

```
¦
¦
¦--- GNSS Management
¦       ¦
¦       ¦
¦       ¦---------- Site name and coordinates
¦       ¦
¦       ¦---------- Tracking
¦       ¦               ¦--- General
¦       ¦               ¦--- GPS
¦       ¦               ¦--- GLONASS
¦       ¦               ¦--- GALILEO
¦       ¦               ¦--- BeiDou
¦       ¦               ¦--- QZSS
¦
¦       ¦---------- Data streams
¦       ¦               ¦--- Outgoing data streams
¦       ¦               ¦       ¦--- Create new data stream
¦       ¦               ¦
¦       ¦               ¦--- Incoming data stream
¦       ¦                       ¦--- Create new data stream
¦       ¦
¦       ¦---------- Logging sessions
¦       ¦               ¦--- Sessions
¦       ¦               ¦       ¦--- Create new Logging session
¦       ¦               ¦
¦       ¦               ¦--- Smart clean-up
¦       ¦
¦       ¦---------- FTP and USB locations
¦       ¦               ¦--- FTP locations
¦       ¦               ¦--- USB locations (GR25/50 only)
¦       ¦
¦       ¦---------- Antenna management
¦       ¦               ¦--- Select antenna
¦       ¦               ¦--- Antenna management
¦       ¦
¦       ¦---------- Wake-up sessions
¦
¦
¦--- Receiver setup
¦       ¦
¦       ¦---------- Network connections
¦       ¦               ¦--- General
¦       ¦               ¦--- Ethernet
¦       ¦               ¦--- Mobile internet
¦       ¦               ¦--- Bluetooth / WLAN (GR25/50 only)
```

```
¦         ¦
¦         ¦---------- Access management
¦         ¦                ¦--- User management
¦         ¦                ¦       ¦--- Create new user
¦         ¦                ¦
¦         ¦                ¦--- Access settings
¦         ¦
¦         ¦---------- Spider and remote access
¦         ¦
¦         ¦---------- Web server
¦         ¦
¦         ¦---------- DynDNS
¦         ¦
¦         ¦---------- FTP server
¦         ¦
¦         ¦---------- Device management
¦         ¦                ¦--- Modem/Phone
¦         ¦                ¦--- Radio
¦         ¦
¦         ¦---------- Event log
¦         ¦
¦         ¦---------- Power management
¦         ¦
¦         ¦---------- PPS and Event in (GR25/50 only)
¦         ¦
¦         ¦---------- SNMP
¦         ¦
¦         ¦---------- Tools
¦                      ¦--- Tools
¦                      ¦
¦                      ¦--- Firmware
¦                      ¦       ¦--- Upload new firmware
¦                      ¦
¦                      ¦--- Options
¦                      ¦       ¦--- Upload new option files
¦                      ¦
¦                      ¦--- Languages
¦                      ¦        ¦--- Upload new language files
¦                      ¦
¦                      ¦--- Receiver settings/Backup
¦                              ¦--- Backup current receiver settings
¦                              ¦--- Upload new receiver settings
¦
¦--- Help
¦
¦
```

```
¦--- Support
¦        ¦
¦        ¦
¦        ¦---------- Properties
¦        ¦
¦        ¦---------- Support tool
¦        ¦
¦        ¦---------- Leica Active Assist
¦        ¦
¦        ¦---------- Links
¦
¦
¦--- Logout
```

Appendix F: Directory Structure of the Memory Device

Directory Structure of the Memory Device

Directory structure

```
¦--- USB Memory Device                    Only available if external USB device is attached
¦        ¦
¦        ¦---------- Data                 Storing raw data logging data for all logging sessions with archiving to
¦        ¦                                external USB device configured
¦        ¦---------- Session1*
¦        ¦
¦        ¦---------- Session1*
¦
¦
¦--- SD Card
        ¦
        ¦--- Data                         Storing raw data logging data
        ¦        ¦
        ¦        ¦
        ¦        ¦---------- Session1*
        ¦        ¦
        ¦        ¦---------- Session2*
        ¦        ¦
        ¦        ¦---------- Session3*
        ¦
        ¦
        ¦--- Transfer                     Upload and download files
                ¦
                ¦
                ¦---------- Antenna       Upload antenna files
                ¦
                ¦---------- Firmware      Upload firmware files
                ¦
                ¦---------- Options       Upload option files
                ¦
                ¦---------- Language      Upload language files
                ¦
                ¦---------- Settings      Upload system configuration
```

* The name of each of the subdirectories will be the configured logging session name. For example an MDB, RINEX or Hatanaka raw data logging session.

Appendix G: GR/GM Default Settings

GR/ GM Default Settings

The outcome of selecting the action **Format receiver settings (Reset all)** is listed for each default setting.

Access management

Setting	Default setting
Access to Web interface is	Fully restricted

Format receiver settings outcome

All users are deleted.

The Administrator account is restored with the **User name:** Admin and **Password:** 12345678. The access rights are Administrator for the Web interface and Read/Write for FTP access to the SD card.

Antenna management

Setting	Default setting
Antenna	ADVNULLANTENNA
Height Reading	0
Measurement type	Vertical

Format receiver settings outcome

All user defined antennas are deleted. Default settings listed above are restored.

All default antennas are set back to their default values.

When using **Restore default values** in the **Antenna Management** page, all user defined antennas will not be deleted. All default antennas are set back to their default values.

Create new user page

Setting	Default setting
Username	Empty
Password	Empty
Confirm Password	Empty
Web interface user level	Status Viewer
FTP server access	Read only

Format receiver settings outcome

Default settings listed above are restored.

Data streams

Incoming data streams wizard

Setting	Default setting
Session type	Meteo
Device	Meteo Met4a
Data rate	4s
Activate data stream	Enabled

Outgoing data streams wizard

Setting	Default setting
Session type	Real time
Reference station ID	0
End of message	Nothing
Time slicing	Disabled
Connection type	TCP/IP server
TCP/IP port	Empty
Allow connections	1
Limit access range	1.1.1.1 to 254.254.254.254
Activate data stream	Enabled

Format receiver settings outcome

All incoming and outgoing data streams are deleted. Default settings listed above are restored.

Device management

Format receiver settings outcome

- All default devices are restored.
- All settings for the default devices are set back to factory defaults.
- All user defined devices are deleted.

DynDNS

Setting	Default setting
Service provider	Not used
Hostname	Empty
Username	Empty
Password	Empty

Format receiver settings outcome

Default settings listed above are restored.

Event log

Setting	Default setting
Autodelete log file entries	After 1 month
Enable event email	Disabled
Send email to	Empty
Email address of sender	Empty
Mail server (SMTP)	Empty
Mail server port	25
Mail server username	Empty
Mail server password	Empty
Send email every	1h

Format receiver settings outcome

All Event log messages are deleted. Default settings listed above are restored.

FTP server

Setting	Default setting
Enabled access to FTP server	Enabled
Allow anonymous access	Empty
FTP control port	21
FTP data port range	50000-51000
Session timeout	180 sec (3min)

Format receiver settings outcome

Default settings listed above are restored.

FTP location

New FTP location

Setting	Default setting
Name	Empty
FTP server host	Empty
FTP server port	21
FTP root directory	/
Directory naming convention for FTP push	Same as logging session
Username	Empty
Password	Empty

Send commands	Empty
Use passive mode	Enabled

Format receiver settings outcome

All configured FTP locations are deleted. Default settings listed above are restored.

Logging session

Logging session wizard

Setting	Default setting
Session name	Empty
Data type	MDB
Session priority	medium (Smart clean up warning displayed)
Session type	Continuous

Logging rate	1 sec
File length	1h
Dynamics	Static
Log doopler observations	Disabled

Zip files	Disabled
Directory naming convention	Session name/Site/Year/Month/Day of month
Choose FTP location	No FTP location
Delete files	Never

Format receiver settings outcome

All configured logging sessions are deleted. Default settings listed above are restored.

The according data on the SD card is not deleted. Format reciever settings does not reformat the SD card. Files must be deleted from the SD card manually or the SD card can be formatted from the web interface via **Receiver setup / Tools**.

Mobile ethernet

Setting	Default setting
Device	Not used
Pin code	Empty
Puk code	Empty
APN	Empty
Username	Empty
Password	Empty
IP address	Dynamic
Use default gateway	Disabled

Format receiver settings outcome

Default settings listed above are restored.

Network connections

Setting	Default setting
General	
Receiver hostname	GR/GM(serial number)
Priority	Ethernet Mobile Internet WLAN (only on GR25/50 with WLAN enabled)
Backup communication - Enable	Disabled

Ethernet	
Obtain an IP address automatically	Enabled
IP address	192.168.0.3
Subnet mask	255.255.255.0
Default gateway	Assigned by DHCP
Preferred DNS server	Assigned by DHCP
Alternative DNS server	Assigned by DHCP

Mobile Internet	
Device	Not used
Pin code	Empty
Puk code	Empty
APN	Empty
Username	Empty
Password	Empty
IP address	Dynamic
Use default gateway	Disabled

Bluetooth	
Enable Bluetooth radio	Disabled
Bluetooth name	GR/GM(serial number)
Enable discovery	Disabled
Bluetooth security code	0000

WLAN	
Profile name	Default
SSID	GRxxxxxxx (xxxxxxx = GR25/50 serial number)
Connection type	Ad hoc
Network authentication	Open
Encryption type	Disabled
Network key	(none)

Obtain IP address automatically	not active
IP address	192.168.252.2
Subnet mask	255.255.255.0
Default gateway	0.0.0.0
Preferred DNS server	0.0.0.0
Alternative DNS server	0.0.0.0

Format receiver settings outcome
All default settings listed above are restored.

Power management

Setting	Default setting
Primary supply GR25/50	External 1

Charging mode GR25/50	UPS mode

Power up voltage GR25/50	11.3V
Power down voltage GR25/50	10.5V

Reboot after power failure GR10/30 & GM10/30	Always

Serial (P1) or Serial P(1) and P(2)	Enabled

Format receiver settings outcome
Default settings listed above are restored.

PPS and Event in

Setting	Default setting
PPS output	
Enable PPS output	Disabled
PPS rate	1.0s
Polarity	Falling edge

Event in	
Info to log	None
Polarity	Falling edge

Bias internal	Factory
External bias	0 ns
Time guard	0 s
Description	Empty

Format receiver settings outcome

Default settings listed above are restored.

Remote access wizard

Setting	Default setting
Connection type	TCP/IP server

TCP/IP port	Empty
Limit access range	1.1.1.1 to 254.254.254.254

Activate remote access	Enabled

Format receiver settings outcome

Default settings listed above are restored.

Spider and remote access

Format receiver settings outcome

All remote access ports are deleted.

Site name and coordinates

Setting	Default setting
Site name	Empty
Site code	Last four digits of serial number
Marker name	Empty
Marker number	Empty

Coordinate type	Geodetic
Latitude	all 0
Longitude	all 0
Ellipsoidal height	0

Time zone	(GMT) Greenwich mean time: Dublin, Edinburgh, Lisbon, London

Format receiver settings outcome

As listed.

Smart clean up

Setting	Default setting
Smart clean up	Disabled

Format receiver settings outcome

Default settings listed above are restored.

SNMP

Setting	Default setting
Enable SNMP	Disabled
Community	Public
System location	Empty
System contact	Empty

Format receiver settings outcome

Default settings listed above are restored.

Tools

Format receiver settings outcome

All Firmware files, Options, Language files and Receiver settings backup files that were previously loaded on the SD card are still displayed after the receiver settings have been formatted.

Tracking and Oscillator

Setting	Default setting
Satellite system	GPS on, all other off
Satellite signals	GPS L1 and L2P(Y) on, all other off
Cut off angle	10º
Code smoothing	Smoothed
Message on loss of lock	Off
Use external oscillator	Internal

Format receiver settings outcome

All default settings listed above are restored.

Velocity & Displacement Engine

Setting	Default setting
Enable Engine	Disabled

Current thresholds used for displacement detection	Default value
Threshold East	0.0120 m/s
Threshold North	0.0150 m/s
Threshold Up	0.0300 m/s

Wake-up sessions

Create new Wake-up session wizard

Setting	Default setting
Name	Empty
Wake up at	next day, 0:00:00
Power down	after next day 1:00:00
No. of repeats	No repeats
Activate wake-up session	Enabled

Format receiver settings outcome

All configured Wake-up sessions are deleted. All default settings listed above are restored.

Web server

Setting	Default setting
Protocol	HTTP
Custom port	Empty
SSL certificate	Empty
SSL key	Empty

Format receiver settings outcome

Default settings listed above are restored.

Appendix H: Event log messages

Event log messages

The following table provides an overview of Event log messages you might encounter when working with GR/GM receivers.

The list does not cover all possible messages. The majority of the messages are self-explanatory and therefore no further explanations are given in the table below.

Message	Explanation / Action
Please consider running the support tool manually. Support information has been found on the receiver.	1. Go to **Support / Support tool** page and enter all necessary information. 2. In the comment box mention that support information has been found on your receiver and try to explain the latest changes done on the receiver. 3. Then press the Mail icon to send your support information to Network Reference Stations support.

Appendix I: Velocity & Displacement Engine

Velocity & Displacement Engine: Data Rate Relationship

Velocity & Displacement Engine rate and NMEA LVM/LDM rate

The Velocity & Displacement Engine computation rate is always equal to the position update rate of the receiver.

The position update rate of the receiver can be found on the page Status: Position.

The position update rate of the receiver is the rate at which the receiver calculates its position. Per default this is one second (1s). In case an incoming real time data stream or an outgoing NMEA data stream is configured with a faster (higher) data rate, the highest configured data rate is automatically also applied for the position update rate.
It is not allowed to log or stream NMEA messages in a rate higher than the position update rate of the receiver.
In case the user configures and activates LVM and/or LDM streams or logging sessions, two cases are possible:

Case 1:
The user sets a LVM and/or LDM stream or logging session with a rate equal to the current receiver position update rate. The velocity and displacement in the LVM and LDM messages at each epoch are equal to the velocity and displacement in the Velocity & Displacement Engine at the same epoch.

Case 2:
The user sets a LVM and/or LDM stream or logging session with a rate lower than the current receiver position update rate, and thus lower than the computation rate of the Velocity & Displacement Engine. The velocity and displacements for the lower rate LVM and LDM messages are then computed as follows:

- The velocities in the LVM message at epoch 't' are the result of averaging all velocities between epochs 't' and 't- ΔtLVM' computed from the Velocity & Displacement Engine, where 'ΔtLVM' is the time between two consecutive epochs of the LVM message.
- The displacements in the LDM message are the result of sampling all the displacements computed from the Velocity & Displacement Engine with a sampling rate equal to the user selected LDM message rate. This means that the displacement at epoch 't' in the LDM message is equal to the displacement computed from the Velocity & Displacement Engine at epoch 't'.

Examples:

The position update rate is 20 Hz. The user configures a LVM stream with 1 Hz data rate. This means that the Velocity & Displacement Engine will compute a velocity every 0.05 s, and the LVM stream will output a velocity every 1 s. In this case, at every epoch of the LVM stream, i.e. every 1 s, the velocities generated from the Velocity & Displacement Engine between the same epoch and the previous epoch of the LVM stream, i.e. 20 epochs of the Velocity & Displacement Engine, are averaged and the result is streamed in the LVM stream.

The position update rate is 10 Hz. The user configures a LDM stream with 2 Hz data rate. This means that the Velocity & Displacement Engine will compute a displacement every 0.1 s, and the LDM stream will output a displacement every 0.5 s. In this case, at every epoch of the LDM stream, i.e. every 0.5 s, the displacement computed in the Velocity & Displacement Engine at the same epoch of the LDM stream is streamed out.

The position update rate is 5 Hz. The user configures a NMEA LDM logging session with 2 Hz data rate. The

position update rate will be updated to 10 Hz. This means that the Velocity & Displacement Engine will compute a displacement every 0.1 s, and the logging session will log a displacement every 0.5 s (every fifth one). In this case, at each epoch of the logging session, the displacement computed in the Velocity & Displacement Engine is logged into the file.

Optimal rate selection

When the NMEA LVM/LDM stream or logging session rate is lower than the Velocity & Displacement Engine computation rate, the velocity and displacement measurements in the LVM and LDM messages are comparable to the case when the rates are equal. However, the variances, covariances and the 3D measurement component quality (CQ) of the velocities and displacements in the LVM and LDM messages are higher when the rate of these messages is lower than the Velocity & Displacement Engine computation rate as compared to the case when the rates are equal.

For optimal velocity and displacement results, we recommend to configure the LVM and/or LDM stream and logging session with a data rate equal to the Velocity & Displacement Engine computation rate, i.e. the position update rate.

Appendix J: Glossary

Glossary: Overview

A

Almanac

Antenna Reference Point (ARP)

Anti spoofing (AS)

B

BINEX

C

CDMA

CMR/CMR+

Cut-off angle

Cycle slip

D

Dilution of Precision (DOP)

Dynamic Host Configuration Protocol (DHCP)

DynDNS

E

Ephemeris

ExFat

F

FTP

FAT64

G

GLONASS

GPS (System) Time

GSM

H

Hatanaka

HTTP

HTTPS

I, J, K,

L

LB2

Leica 4G

Leica format

LL1

M

MDB

N
NMEA-0183
Ntrip

O, P, Q,

R
RINEX
RTCM SC-104

S
Selective Availability (SA)
Signal-to-noise ratio (SNR)
SMTP

T
Time Zone

U
UTC (Coordinated Universal Time)
UT1

V,

W
WGS84
Wide Area Augmentation System (WAAS)
World Geodetic System 1984 (WGS 84)

X, Y, Z

Almanac

A set of parameters included in the GPS satellite navigation message that a receiver uses to predict the approximate location of a satellite. The almanac contains information about all of the satellites in the constellation.

Antenna Reference Point (ARP)

The **Antenna Reference Point** of an antenna is defined as the intersection of the BPA (Bottom of Pre-Amplifier) horizontal plane and the vertical symmetry axis of the antenna.
Phase center offsets are expressed in relation to the ARP.

Related topics

GNSS Management: Calculate the antenna height reading

Anti spoofing (AS)

The process of encrypting the P-code by modulo-2 addition of the P-code and a secret encryption W-code. The resulting code is called the Y-code. AS prevents an encryption-keyed GPS receiver from being "spoofed" by a bogus, enemy-generated GPS P-code signal.

BINEX

BINary **EX**change format: binary exchange representation of GPS data and metadata which allows for encapsulation all or most of the information currently exchanged with the ASCII formats of RINEX, SINEX, IONEX, SP3, and so on as various BINEX records are defined.

CDMA

CDMA is a telecommunication standard for transmitting data packages using the Internet protocol.

CMR/CRM+

CMR and CMR+ send out reference station coordinates of the antenna phase center, not the ARP. Additionally, the distance from the marker to the antenna phase center is transmitted. The reference station antenna type is not transferred (i.e. not known to rover). The rover can therefore not reduce the antenna coordinate to the ARP. The reference station height seen on the rover will therefore not be the height reading as entered on the reference station but the entered antenna height reading plus the vertical antenna phase center offset.

Cut-off angle

The minimum elevation angle below which no more GPS satellites are tracked by the receiver.

Cycle slip

A discontinuity in GPS carrier-phase observations, usually of an integer number of cycles, caused by temporary signal loss. If a GPS receiver loses a signal temporarily, due to obstructions for example, when the signal is reacquired there may be a jump in the integer part of the carrier-phase measurement due to the receiver incorrectly predicting the elapsed number of cycles between signal loss and reacquisition.

Dilution of Precision (DOP)

An indicator of satellite geometry for a unique constellation of satellites used to determine a position. Positions tagged with a higher DOP value generally constitute poorer measurement results than those tagged with lower DOP.

Dynamic Host Configuration Protocol (DHCP)

A network application protocol used by devices (DHCP clients) to obtain configuration information for operation in an Internet Protocol network. This protocol reduces system administration workload, allowing devices to be added to the network with little or no manual intervention.

DynDNS

It is a dynamic DNS service, which allows users to have a subdomain that points to a computer with regularly changing IP addresses, such as those served by many consumer-level Internet ser-vice providers. An update client installed on the user's computer, or built into a networked device such as a router or webcam, keeps the hostname up to date with its current IP address.

See for details: http://en.wikipedia.org/wiki/Dyndns

Ephemeris

A description of the path of a celestial body indexed by time (from the Latin word, ephemeris, meaning diary). The navigation message from each GPS satellite includes a predicted ephemeris for the orbit of that satellite valid for the current hour. The ephemeris is repeated every 30 seconds and is in the form of a set of 16 Keplerian-like parameters with corrections that account for the perturbations to the orbit caused by the earth's gravitational field and other forces.

ExFat / FAT64

ExFAT (Extended File Allocation Table, also sometimes referred to as FAT64) is a proprietary file system suited especially for USB flash drives developed by Microsoft.

ExFAT can be used where the NTFS file system is not a feasible solution, due to data structure overhead, or where the file size or directory restrictions of previous versions of the FAT file sys-tem are unacceptable.
Windows XP and Windows Server 2003 (both x86 and x64) users can add support for exFAT by installing an update from Microsoft.[1] An experimental, open source Linux kernel module that supports the reading of exFAT files is currently under development.[6] A FUSE-based full-featured implementation is currently in beta status.[7] A proprietary, read/write solution, licensed and derived from the Microsoft exFAT implementation, is available for Android, Linux and other operating systems from Tuxera.[8] Mac OS X Snow Leopard added exFAT support in version 10.6.5 on November 10, 2010.[12] OS X 10.6.5 and later can read, write, and create exFAT partitions.

See for details: http://en.wikipedia.org/wiki/Exfat

FTP

FTP stands for File Transfer Protocol.

FTP is used for pulling (getting) or pushing (putting) ASCII or binary files between two nodes on a TCP/IP network. If set up, the FTP connection can either be realized via an anonymous or a known user account. FTP is one of the standard protocols defined for use on a TCP/IP network.

GLONASS

Russia's Global Navigation Satellite System (Global'naya Navigatsionnaya Sputnikovaya Sistema). The operation of this system is similar to GPS.

GPS (System) Time

The time scale to which GPS signals are referenced. GPS Time derives from a composite or "paper" clock consisting of all operational monitor station and satellite atomic clocks. It is steered over the long run to keep it within about 1 micro-second of UTC, as maintained by the Master Clock at the U.S. Naval Observatory, ignoring the UTC leap seconds. At the integer second level, GPS Time equalled UTC in 1980, but currently, due to the leap seconds that have been inserted into UTC, it is ahead of UTC by 10 seconds.

GSM

GSM (Global System for Mobile communications) is a telecommunication standard for transmitting data packages to mobile phones.

HATANAKA

A compact form of RINEX.

HTTP

T**he Hypertext Transfer Protocol (HTTP)** is a networking protocol for distributed, collaborative, hypermedia information systems.[1] HTTP is the foundation of data communication for the World Wide Web.

http://en.wikipedia.org/wiki/Http

HTTPS

Hypertext Transfer Protocol Secure (HTTPS) is a combination of the Hypertext Transfer Protocol with the SSL/TLS protocol to provide encrypted communication and secure identification of a network web server. HTTPS connections are often used for payment transactions on the World Wide Web and for sensitive transactions in corporate information systems.

http://en.wikipedia.org/wiki/Https

LB2

The proprietary binary data format for streaming GPS data used by Leica.

Leica 4G

Leica proprietary RT format supporting GPS, GLONASS, Galileo and BeiDou.

Leica format

Leica proprietary RT format supporting GPS and GLONASS.

Leica format sends out reference station coordinates of the antenna phase center, not the ARP. Additionally the distance from the marker to the antenna phase center is transmitted. The Leica format also sends the antenna type of the reference station antenna as configured on the reference station. The rover can therefore reduce the antenna coordinate to the ARP. The reference station height value seen on the rover can therefore be reduced to the ARP and is then displayed as entered on the reference receiver.

LLI

Loss of **L**ock **I**ndicator: 4th decimal for phase measurements only, shown in RINEX format.

MDB

Leica proprietary database file format.

NMEA Log File

Leica proprietary NMEA log file. It supports logging NMEA stream messages into a file. The naming convention for NMEA log files is as follows: ssssdddhmm.yy.nmea

NMEA file component	Description
ssss	4 character serial number (last 4 digits) or user entered Sensor Id.
ddd	Day of the year of the first record [UT].
h	Hour of the day. If the file is created for the 1st hour of the day then h = a. h can have any value from a to x. The hour indicator refers to UTC time.
mm	Start time of NMEA file creation, given in minutes of the current hour.
yy	The year.
nmea	File extension.

RefWorx 3.20 only supports logging NMEA LVM and LDM messages.

NMEA-0183

A standard established by the **N**ational **M**arine **E**lectronics **A**ssociation (NMEA) that defines electrical signals, data transmissions protocol, timing, and sentence formats for communicating navigation data among marine navigation instruments.

Ntrip

Networked Transport of RTCM via Internet Protocol

- is a protocol streaming real time corrections over the Internet.
- is a generic protocol based on the Hypertext Transfer Protocol HTTP/1.1.
- is used to send differential correction data or other kinds of streaming data to stationary or mobile users over the Internet. This process allows simultaneous computer, laptop, PDA, or instrument connections to a broadcasting host.
- supports wireless Internet access through mobile IP networks like digital cellular phones or modems.

The Ntrip Server could be the GPS instrument itself. This setup means the GPS instrument is both the Ntrip Source generating the real time data and also the NTRIP Server transferring this data to the Ntrip Caster.

Ntrip and its role in the Internet

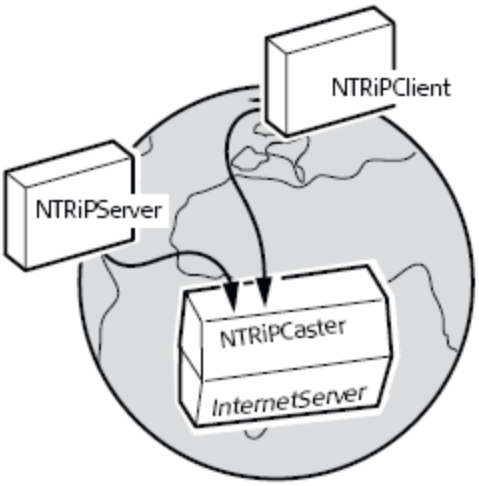

GS_044

Ntrip Caster

The Ntrip Caster

- is an Internet server handling various data streams to and from the Ntrip Servers and Ntrip Clients.
- checks the requests from Ntrip Clients and Ntrip Servers to see if they are registered to receive or provide real time corrections.
- decides whether there is streaming data to be sent or to be received.

Ntrip Client

The Ntrip Client receives data streams. This setup could be, for example a real time rover receiving real time corrections.
In order to receive real time corrections, the Ntrip Client must first send

- a user ID
- a password
- an identification name, the so-called Mountpoint, from which real time corrections are to be received

to the Ntrip Caster.

Ntrip Server

The Ntrip Server transfers data streams.
In order to send real time corrections, the Ntrip Server must first send

- a password
- an identification name, the so-called Mountpoint, where the real time corrections come from

to the Ntrip Caster.

Before sending real time corrections to the Ntrip Caster for the first time, a registration form must be completed. This form is available from the Ntrip Caster administration centre. Refer to the Internet.

Ntrip Source

The Ntrip Source generates data streams. This setup could be base sending out real time corrections.

Ntrip system components

Ntrip consists of three system components:

- Ntrip Clients
- Ntrip Servers
- Ntrip Caster

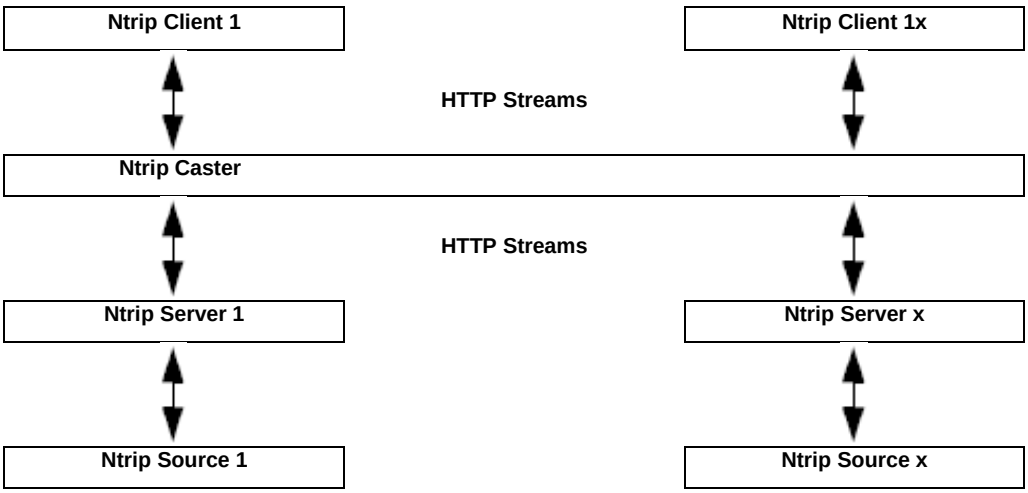

Real time message satellite signal support

Message format	GPS	GPS L5	GLONASS	Galileo	BeiDou
Leica	✔	-	✔	-	-
Leica 4G	✔	✔	✔	✔	✔
CMR	✔	-	✔*	-	-
CMR+	✔	-	✔*	-	-
RTCM 3.x	✔	-	✔	-	-
RTCM 3.x MSM	✔	✔	✔	✔	✔
RTCM 1,2 (v2.1)	✔	-	-	-	-
RTCM 1,2 (v2.2)	✔	-	-	-	-
RTCM 1,2 (v2.3)	✔	-	-	-	-
RTCM 9,2 (v2.1)	✔	-	-	-	-

RTCM 9,2 (v2.2)	✔	-	-	-	-
RTCM 9,2 (v2.3)	✔	-	-	-	-
RTCM 18,19 (v2.1)	✔	-	-	-	-
RTCM 18,19 (v2.2)	✔	-	✔	-	-
RTCM 18,19 (v2.3)	✔	-	✔	-	-
RTCM 20,21 (v2.1)	✔	-	-	-	-
RTCM 20,21 (v2.2)	✔	-	-	-	-
RTCM 20,21 (v2.3)	✔	-	-	-	-
RTCM 1,2,18,19 (v2.1)	✔	-	-	-	-
RTCM 1,2,18,19 (v2.2)	✔	-	✔	-	-
RTCM 1,2,18,19 (v2.3)	✔	-	✔	-	-
RTCM 1,2,20,21 (v2.1)	✔	-	-	-	-
RTCM 1,2,20,21 (v2.2)	✔	-	-	-	-
RTCM 1,2,20,21 (v2.3)	✔	-	-	-	-

*CMR from a Leica receiver or Leica GNSS Spider contains Glonass corrections.
To use Glonass corrections, CMR message 3 needs to be decoded by the rover. Leica rovers and some 3rd party rovers (e.g. Javad, Topcon) can apply GLO corrections in CMR format.

RINEX

RINEX stands for **R**eceiver **IN**dependant **EX**change format and has become a standard for GPS data. This receiver supports the following published format versions:

Version 2.11 was defined in the revised version of the paper published by W. Gurtner and G. Mader in the CSTG GPS-Bulletin of September/October 1990 (Revisions: 1993 - 2005). The complete description can be found here: ftp://ftp.unibe.ch/aiub/rinex/rinex211.txt.

Version 3.01 was defined in the paper by W. Gurtner and L. Estey made available in November 2007. The complete description can be found here: ftp://ftp.unibe.ch/aiub/rinex/rinex301.pdf.

Version 3.02 is based on RINEX version 3.01 and was made available in April 2013. The complete description can be found here: ftp://igs.org/pub/data/format/rinex302.pdf

The naming convention for RINEX files is as follows: **ssssdddhxx.yyt**

RINEX file component	Description
ssss	4 character station name (Site code)
ddd	GPS day of the year
h	Hour of the day. If the file is created for the 1st hour of the day then h = a. h can have any value from a to x. The hour indicator refers to GPS time, not local time. **Note**: If a 24 hour file is created, then h = 0 (zero).
xx	Start time of RINEX file creation, given in minutes of the current hour. If you have 1hour files xx is not written.
yy	Year
t	File type: o for observation files d for Hatanaka compressed observation files g for GLONASS navigation files l for GALILEO navigation files n for GPS navigation files q for QZSS navigation files

	p for mixed GNSS navigation files m for meteo files a for auxilliary files (proprietary, no official part of RINEX standard)

RTCM SC-104

The special committee of the Radio Technical Commission for Maritime Services that developed recommended standards for DGPS.

Selective Availability (SA)

The policy and procedure of denying to most nonmilitary GPS users the full accuracy of the system. SA is achieved by dithering the satellite clock (delta-process) and degrading the navigation message ephemeris (epsilon-process). Currently SA primarily uses the delta-process. The effects can be removed with encryption keys or through DGPS techniques.

Signal-to-noise ratio (SNR)

The ratio of incoming signal strength to the amount of interfering noise as measured in decibels on a logarithmic scale.

SMTP

Simple **M**ail **T**ransfer **P**rotocol: normal e-mail transfer protocol.

SSID

The SSID (service set identification) is the ID of a wireless LAN profile, needed for identifying a wireless network. Only if the configured SSID matches, can a connection to an access point (infrastructure mode) or another wireless device (ad hoc mode) be established.

Time Zone

Time zone = Local Time - Greenwich Mean Time (GMT). Note that Greenwich Mean Time is approximately equal to GPS time.

UTC (Coordinated Universal Time)

The time scale based on the atomic second but occasionally corrected, by the insertion of leap seconds, to keep it approximately synchronized with Earths rotation. The leap second adjustments keep UTC within 0.9 seconds of UT1.

UT1

A time scale based on Earth's axial spin. UT1 is a measure of the true angular orientation of Earth in space. Because Earth does not spin at exactly a constant rate, UT1 is not a uniform time scale.

WGS84

WGS 1984 is the global geocentric datum to which all GPS positioning information is referred to.

Wide Area Augmentation System (WAAS)

A system that enhances the GPS SPS and is available over a wide geographical area. The WAAS being developed by the Federal Aviation Administration, in concert with other agencies, will provide WADGPS corrections, additional ranging signals from geostationary (GEO) satellites, and integrity data on the GPS and GEO satellites.

World Geodetic System 1984 (WGS 84)

A set of parameters, established by the U.S. Defense Mapping Agency, for determining geometric and physical geodetic relationships on a global scale. The system includes a geocentric reference ellipsoid; a coordinate system; and a gravity field model. The ellipsoid is essentially that of the International Union of Geodesy and Geophysics Geodetic Reference System 1980. The coordinate system is a realization of the conventional terrestrial system, as established by the International Earth Rotation Service. The descriptions of the GPS satellite orbits in the navigation message are referenced to WGS 84.

WPA / WPA2

WPA (Wi-Fi Protected Access) and WPA2 (Wi-Fi Protected Access II) are security protocols used to encrypt the data which is exchanged within wireless computer networks.

Index

Revolutionising the world of measurement and survey for nearly 200 years, Leica Geosystems creates complete solutions for professionals across the planet. Known for premium products and innovative solution development, professionals in a diverse mix of industries, such as surveying and engineering, safety and security, building and construction, and power and plant, trust Leica Geosystems to capture, analyse and present smart geospatial data. With the highest-quality instruments, sophisticated software, and trusted services, Leica Geosystems delivers value every day to those shaping the future of our world.

Leica Geosystems is part of Hexagon (Nasdaq Stockholm: HEXA B; hexagon.com), a leading global provider of information technologies that drive quality and productivity improvements across geospatial and industrial enterprise applications.

Swiss Technology
by Leica Geosystems

05.16

Leica Geosystems AG
www.leica-geosystems.com

- when it has to be **right**

Leica Geosystems